

Range of double inlet direct driven low pressure centrifugal fans manufactured from galvanised sheet steel.
All the models are fitted with forward curved centrifugal impellers manufactured from galvanized sheet steel.

Motors
Housing closed motors, IP44, class F, equipped with thermal protection and ball bearings greased for life.
Electrical supply:
4 or 6 pole depending on version.
Single phase 230V-50Hz (capacitor fitted on the fan housing).
Three phase 230/400V-50Hz.
(See characteristics chart).

On request
Housing open motors IP20, class F.
Coupling flange fitted at the fan outlet (B version).
Special version kitchen IP55, class F.
Three phase motors suitable for frequency inverter control.



Anti-vibration mounts
All motors are fitted with support including rubber antivibration mounts reducing the noise transmitted to the installation.

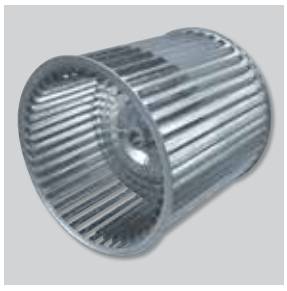

Impeller dynamically balanced
Impeller dynamically balanced, according to ISO 1940 standard, providing vibration free operation.

POSITIONS

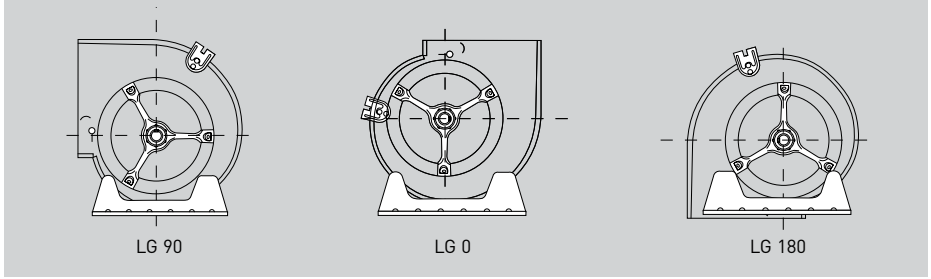

Mounting feet (accessory) allow 3 positions of the inlet discharge.

REFERENCE

CBM	9/9	373	6P	T	C	VR	K	B8	MP	IP55
1	2	3	4	5	6	7	8	9	10	11

1 - Product range.
2 - 7/7, 9/7, 9/9, 10/8, 10/10, 12/9, 12/12, 15/15
Wheel dimensions in inches.
3 - Motor Power (W).
4 - 4P, 6P: Number of pole.
5 - Nothing: Single phase.
T: Three phase.
6 - C: Closed motor (IP44).
RE: External Rotor Motor.
Nothing: Open motor (IP20).
7 - Nothing: 1 speed - motor.
2V: fan with 2 speed motor.
3V: fan with 3 speed motor.
VR: Speed controllable motor by tension.
EC-0-10V, EC-CK, EC-PK, EC-CK/DG:
motor with electronic control.
8 - Nothing: Standard CBM.
K: CBM Reinforced cubic structure.
9 - Nothing: Standard CBM.
B10, B11, B5, B7, B8, B9, BE: CBM fitted with outlet coupling flange.
The number indicates the fixing holes diameter.
10 - Nothing: Product on individual packing.
MP: Multi product palletizing.
11 - IP rating.

TECHNICAL CHARACTERISTICS

Before installation check that the product electrical characteristics listed on the data plate label (voltage, power, frequency, etc.) match those of the intended electrical supply.

Model	Motor power (W)	Speed (r.p.m)	Capacitor (µF/V)	Maximum absorbed current (A)	Airflow (m^3/h)	Maximum temperature (ºC)	Sound pressure level* (dB(A))	Weight (kg)	Speed controller	
									REB	RMB
SINGLE PHASE										
CBM-7/7 72 6P C VR	72	900	3/450	0,6	1080	50	51	6,7	1	1,5
CBM-9/7 373 4P C VR	373	1400	10/450	3,8	2560	40	68	11,3	5	8
CBM-9/9 373 4P C VR	373	1400	10/450	3,9	2900	40	68	12,4	5	8
CBM-9/9 550 4P C VR	550	1400	25/450	3,9	3270	40	69	14	5	8
CBM-10/8 550 4P C VR	550	1400	25/450	4,5	2750	40	66	15	5	8
CBM-10/10 245 6P C VR	245	900	8/450	3,1	3460	40	64	15,4	5	8
CBM-10/10 550 4P C VR	550	1400	25/450	4,5	3390	40	66	15,3	5	8
CBM-12/9 736 6P C VR	736	900	20/450	5	4590	40	66	24,2	10	8
CBM-12/12 736 6P C VR	736	900	20/450	6	4960	40	67	26,5	¬	¬

Model	Motor power (W)	Speed (r.p.m.)	Maximum absorbed current		Airflow (m^3/h)	Maximum temperature (ºC)	Sound pressure level* (dB(A))	Weight (kg)	Variable frequency inverter VTFM Electrical supply	
			230V	400V					1/230V	3/400V
THREE PHASE										
CBM-10/8 736 4PT C	736	1400	3,6	2,1	3480	40	71	20	VFTM MONO 0,55	VFTM TRI 0,75
CBM-10/8 1500 4PT C	1500	1400	8,5	4,9	6560	50	82	20,5	VFTM MONO 2,2	VFTM TRI 2,2
CBM-10/10 1500 4PT C	1500	1400	10,1	5,8	7850	40	81	22	VFTM MONO 2,2	VFTM TRI 2,2
CBM-12/9 736 6PT C	736	900	4,7	2,7	5920	70	71	26,5	VFTM MONO 0,75	VFTM TRI 1,1
CBM-12/9 1100 6PT C	1100	900	7,3	4,2	6680	40	74	26,5	VFTM MONO 1,5	VFTM TRI 1,5
CBM-12/12 1100 6PT C	1100	900	8,5	4,9	8290	40	76	28,5	VFTM MONO 2,2	VFTM TRI 2,2
CBM-15/15 2200 6PT C K	2200	900	8,8	5,1	9100	40	72	43,2	VFTM MONO 2,2	VFTM TRI 2,2

* Sound pressure levels in dB(A), measured at 1,5 meters at the fan inlet side in free field.

DIMENSIONS (mm)

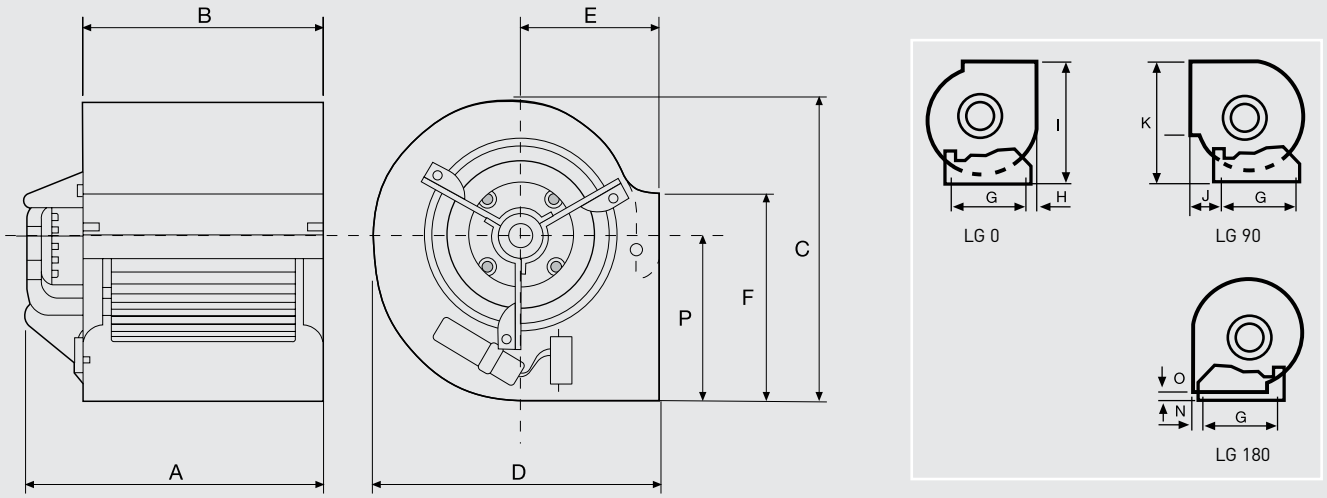

Model	A	B	C	D	E	F	G	H	I	J	K	N	O	P
CBM-7/7 72 6P C VR	270	233	327	308	145	207	225	47,6	314	57	333	8,6	6	187
CBM-9/7 373 4P C VR	306	234	390	381	184	260	296	34,5	382	69	395,5	34,5	6	221
CBM-9/9 373 4P C VR	348	300	390	381	184	260	296	34,5	382	69	395,5	34,5	6	221
CBM-9/9 550 4P C VR	371	300	390	381	184	260	296	34,5	382	69	395,5	34,5	6	221
CBM-10/8 550 4PC VR	357	267	443	423	200	288	339	39	427	67	451,5	39	8	249
CBM-10/10 245 6P C VR	377	333	443	423	200	288	339	39	427	67	451,5	39	8	249
CBM-10/10 550 4P C VR	388	333	443	423	200	288	339	39	427	67	451,5	39	8	249
CBM-12/9 736 6P C VR	419	311	521	490	229	341	407	40,5	496,5	69,5	528,5	41,5	4,5	293
CBM-12/12 736 6P C VR	459	396	521	490	229	341	407	40,5	496,5	69,5	528,5	41,5	4,5	293
CBM-10/8 736 4PT C		267	443	423	200	288	339	39	427	67	451,5	39	8	249
CBM-10/8 1500 4PT C	401	267	443	423	200	288	339	39	427	67	451,5	39	8	249
CBM-10/10 1500 4PT C	387	333	443	423	200	288	339	39	427	67	451,5	39	8	249
CBM-12/9 736 6PT C	419	311	521	490	229	341	407	40,5	496,5	69,5	528,5	41,5	4,5	293
CBM-12/9 1100 6PT C	416	311	521	490	229	341	407	40,5	496,5	69,5	528,5	41,5	4,5	293
CBM-12/12 1100 6PT C	460	396	521	490	229	341	407	40,5	496,5	69,5	528,5	41,5	4,5	293

DIMENSIONS CBM-T-15/15 (mm)

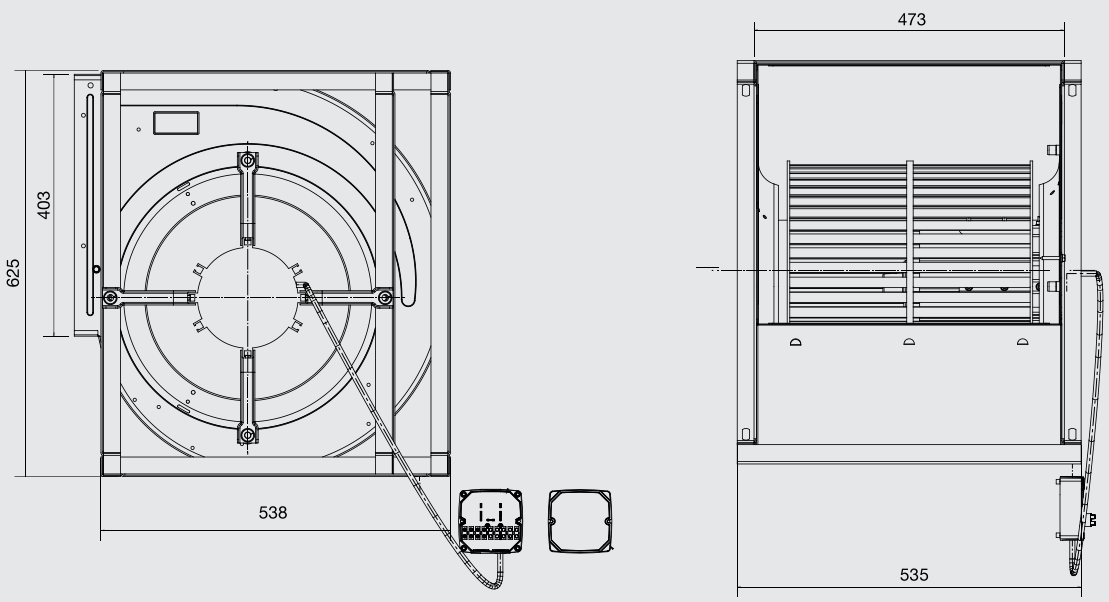

MOUNTING ACCESSORIES

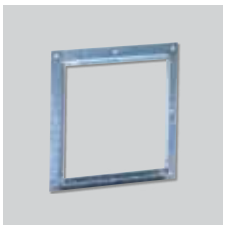

Outlet flange CBM



Mounting feet

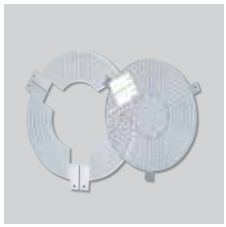

Inlet guard

Model	Outlet flange CBM	Mounting feet	Inlet guard
CBM-7/7	BRIDA DESCARGA CBM-7/7	PIE SOPORTE CBP/CBM 7/7	DEF-CBM-7
CBM-9/7	BRIDA DESCARGA CBM-9/7	PIE SOPORTE CBP/CBM 9/9	DEF-CBM-9
CBM-9/9	BRIDA DESCARGA CBM-9/9	PIE SOPORTE CBP/CBM 9/9	DEF-CBM-9
CBM-10/8	BRIDA DESCARGA CBM-10/8	PIE SOPORTE CBP/CBM 10/10	DEF-CBM-10
CBM-10/10	BRIDA DESCARGA CBM-10/10	PIE SOPORTE CBP/CBM 10/10	DEF-CBM-10
CBM-12/9	BRIDA DESCARGA CBM-12/9	PIE SOPORTE CBP/CBM 12/12	DEF-CBM-12
CBM-12/12	BRIDA DESCARGA CBM-12/12	PIE SOPORTE CBP/CBM 12/12	DEF-CBM-12
CBM-15/15	–	–	DEF-CBM-15

ACCESSORIES DIMENSIONS (mm)

Outlet flange CBM

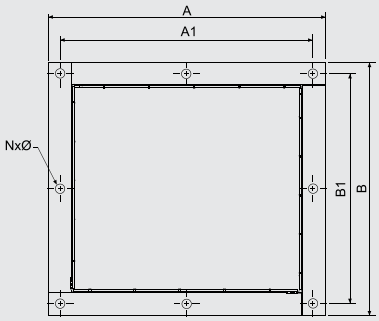

Model	A	A1	B	B1	NxØ (mm)
BRIDA DESCARGA CBM-7/7	289	264	265	240	8x9
BRIDA DESCARGA CBM-9/7	273	253	302	280	8x9
BRIDA DESCARGA CBM-9/9	360	328	315	285	8x10
BRIDA DESCARGA CBM-10/8	314	293	339	316	8x9
BRIDA DESCARGA CBM-10/10	380,5	359	339	316	8x9
BRIDA DESCARGA CBM-12/9	362	341	394,5	374	8x9
BRIDA DESCARGA CBM-12/12	447	426	394,5	374	8x9

Mounting feet



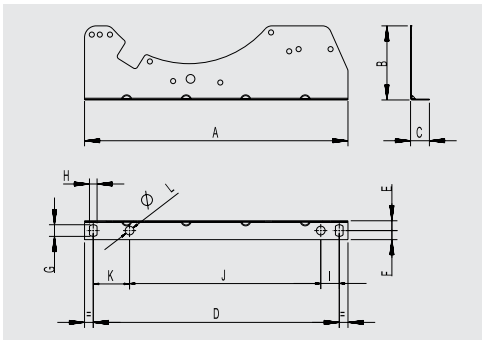

Model	A	B	C	D	E	F	G	H	I	J	K	L
7/	254	47	26	227	13,5	12,5	16	10,5	15	195	15	12
9/	325	102	26	297	13,5	12,5	16	10,5	-	-	35,7	10,5
10/	363	102	26	339	13,5	12,5	16	10,5	37,5	263,5	62	12
12/	434	144	26	407	13,5	12,5	16	10,5	48	333,5	25,5	12

PERFORMANCE CURVES

- p_{sf}: Static pressure in Pa.
- q_v: Airflow in m^3/h and m^3/s.
- SFP: Specific fan power in $W/m^3/s$.
- I: Absorbed current A.
- Measurement category: B.
- Efficiency category: total.
- Fan efficiency without VSD.
- Air flow data in accordance with ISO 5801.

MC	Measurement category
EC	Efficiency category
VSD	VSD must be installed with the fan
SR	Specific ratio
η[%]	Overall efficiency
N	Efficiency grade
[kW]	Absorbed power
[m³/h]	Airflow
[Pa]	Total pressure
[RPM]	Speed

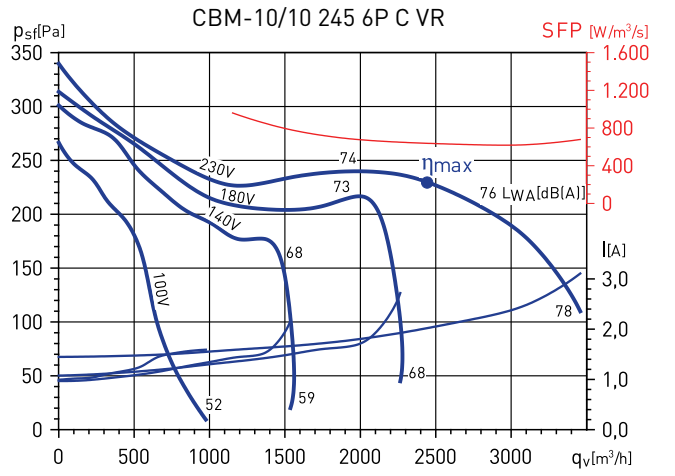

MC*	EC*	VSD*	SR*	η[%]*	N*	[kW]	[m³/h]	[Pa]	[RPM]
B	Total	No	1	40,6	49,2	0,430	2439	257	924

PERFORMANCE CURVES - SINGLE-PHASE MOTORS

- p_{sf}: Static pressure in Pa.
- q_v: Airflow in m^3/h and m^3/s.
- SFP: Specific fan power in $W/m^3/s$.
- I: Absorbed current A.
- Measurement category: B.
- Efficiency category: total.
- Fan efficiency without VSD.
- Air flow data in accordance with ISO 5801.

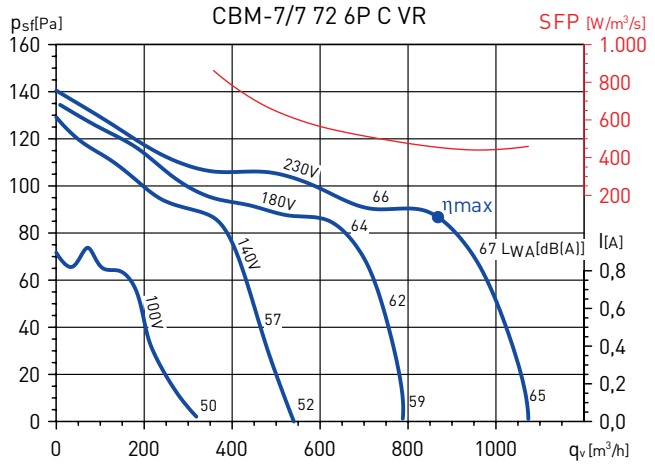

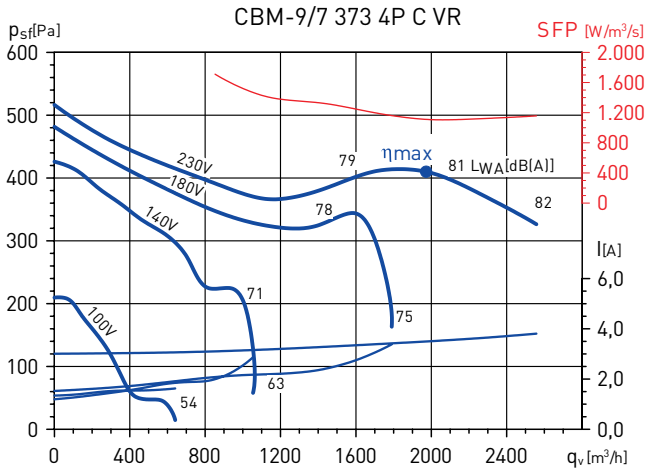

MC*	EC*	VSD*	SR*	η[%]*	N*	[kW]	[m³/h]	[Pa]	[RPM]
B	Total	No	1	41,3	49,0	0,609	1976	458	1387

* See exampe curve.

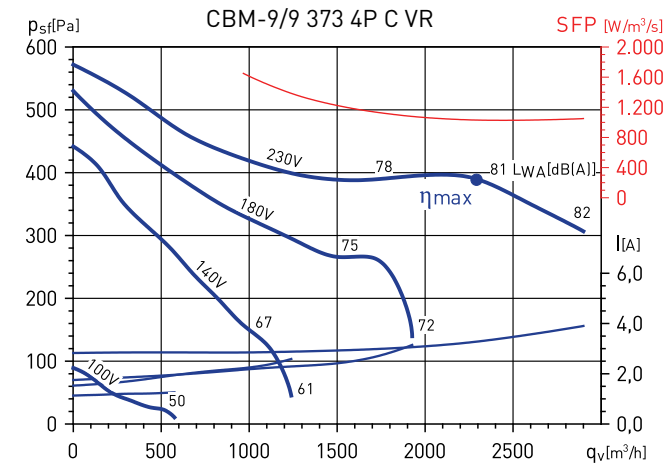

MC*	EC*	VSD*	SR*	η[%]*	N*	[kW]	[m³/h]	[Pa]	[RPM]
B	Total	No	1	41,6	49,1	0,658	2301	429	1370

* See exampe curve.

PERFORMANCE CURVES - SINGLE-PHASE MOTORS

- p_{sf}: Static pressure in Pa.
- q_v: Airflow in m^3/h and m^3/s.
- SFP: Specific fan power in $W/m^3/s$.
- I: Absorbed current A.
- Measurement category: B.
- Efficiency category: total.
- Fan efficiency without VSD.
- Air flow data in accordance with ISO 5801.

CBM-9/9 550 4P C VR

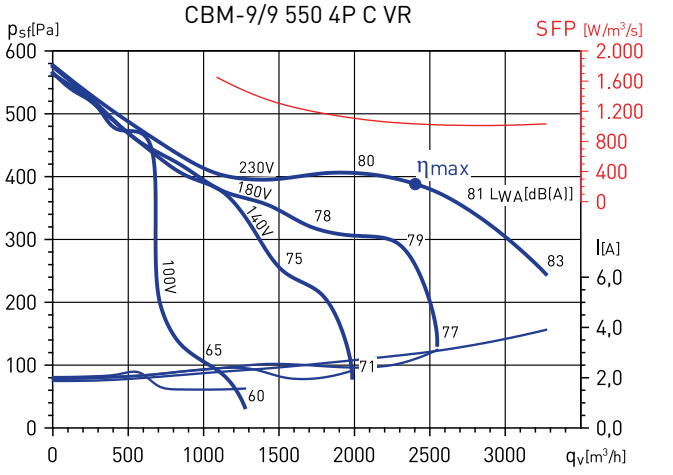

MC*	EC*	VSD*	SR*	η[%]*	N*	[kW]	[m³/h]	[Pa]	[RPM]
B	Total	No	1	41,7	49,0	0,693	2409	432	1376

* See exampe curve.

CBM-10/8 550 4P C VR

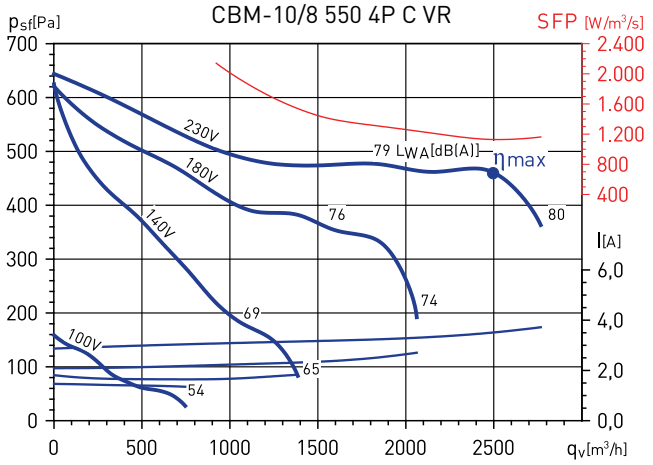

MC*	EC*	VSD*	SR*	η[%]*	N*	[kW]	[m³/h]	[Pa]	[RPM]
B	Total	No	1	44,9	51,9	0,784	2505	513	1308

* See exampe curve.

CBM-10/10 245 6P C VR

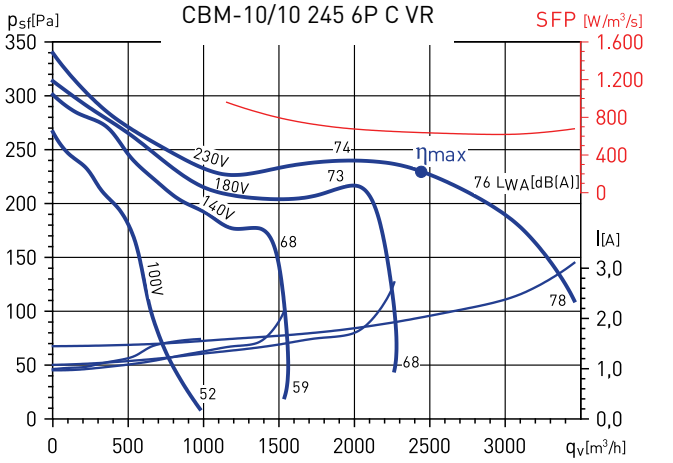

MC*	EC*	VSD*	SR*	η[%]*	N*	[kW]	[m³/h]	[Pa]	[RPM]
B	Total	No	1	40,6	49,2	0,430	2439	257	924

* See exampe curve.

CBM-10/10 550 4P C VR

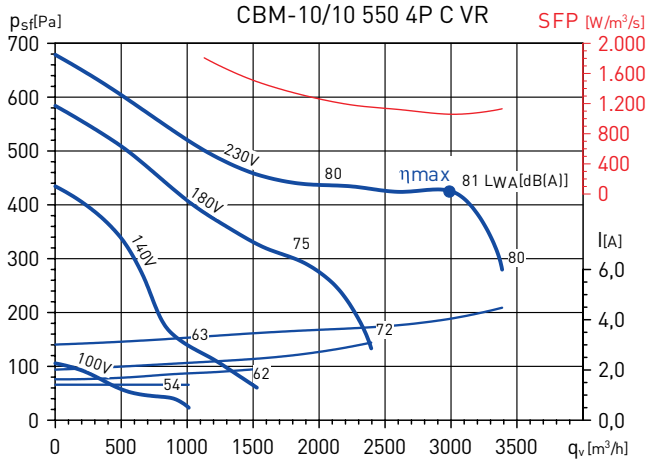

MC*	EC*	VSD*	SR*	η[%]*	N*	[kW]	[m³/h]	[Pa]	[RPM]
B	Total	No	1	43,7	50,4	0,881	2993	471	1282

* See exampe curve.

CBM-12/9 736 6P C VR

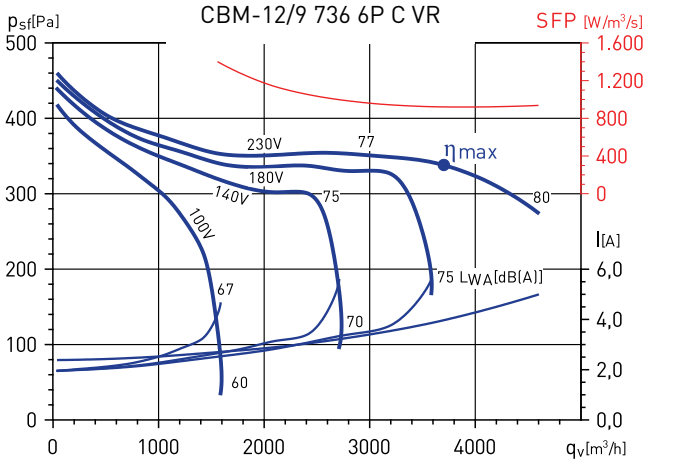

MC*	EC*	VSD*	SR*	η[%]*	N*	[kW]	[m³/h]	[Pa]	[RPM]
B	Total	No	1	42,8	49,3	0,948	3703	395	923

* See exampe curve.

PERFORMANCE CURVES - SINGLE-PHASE MOTORS

- p_{sf}: Static pressure in Pa.
- q_v: Airflow in m^3/h and m^3/s.
- SFP: Specific fan power in $W/m^3/s$.
- I: Absorbed current A.
- Measurement category: B.
- Efficiency category: total.
- Fan efficiency without VSD.
- Air flow data in accordance with ISO 5801.

CBM-12/12 736 6P C VR

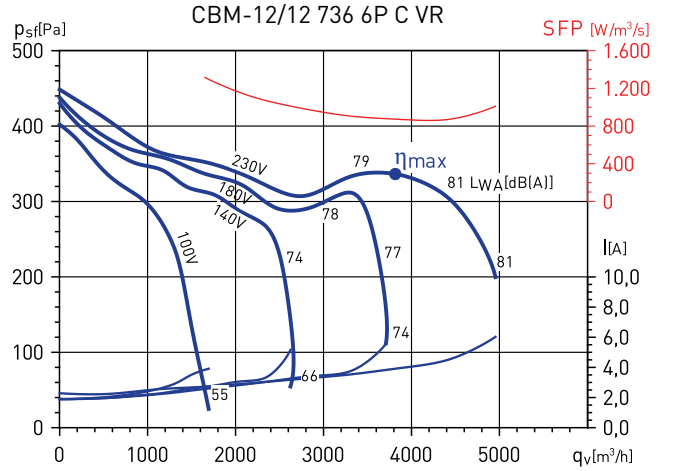

MC*	EC*	VSD*	SR*	η[%]*	N*	[kW]	[m³/h]	[Pa]	[RPM]
B	Total	No	1	42,7	49,2	0,926	3826	374	926

* See exampe curve.

PERFORMANCE CURVES - THREE-PHASE MOTORS

- p_{sf}: Static pressure in Pa.
- q_v: Airflow in m^3/h and m^3/s.
- SFP: Specific fan power in $W/m^3/s$.
- I: Absorbed current A.
- Measurement category: B.
- Efficiency category: total.
- Fan efficiency without VSD.
- Air flow data in accordance with ISO 5801.

CBM-10/8 736 4PT C

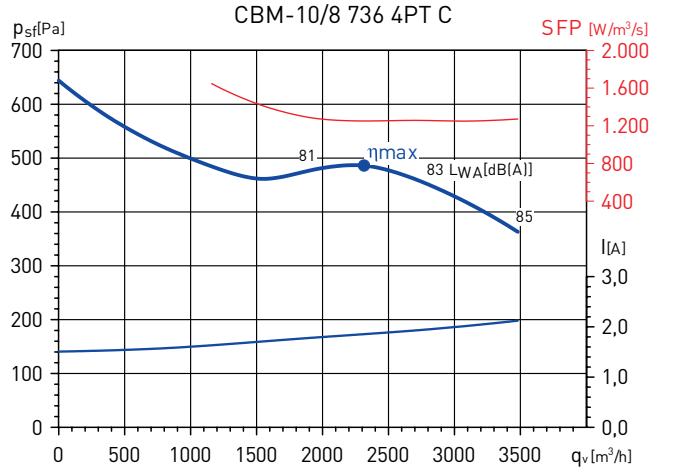

MC*	EC*	VSD*	SR*	η[%]*	N*	[kW]	[m³/h]	[Pa]	[RPM]
B	Total	No	1	42,2	49,1	0,803	2310	527	1351

* See exampe curve.

CBM-10/8 1500 4PT C

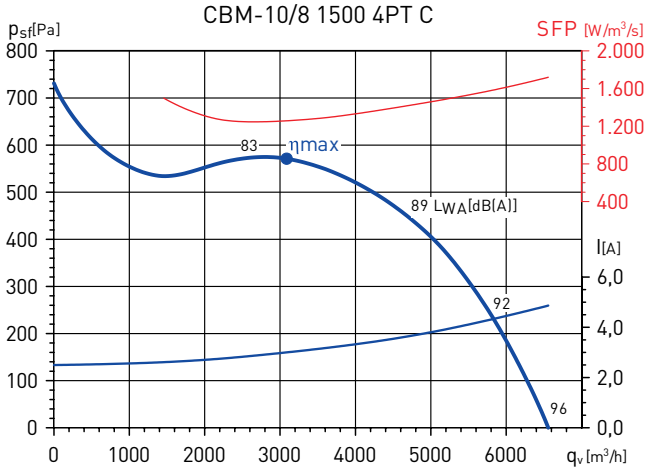

MC*	EC*	VSD*	SR*	η[%]*	N*	[kW]	[m³/h]	[Pa]	[RPM]
B	Total	No	1	51,1	57,2	1,075	3081	642	1459

* See exampe curve.

CBM-10/10 1500 4PT C

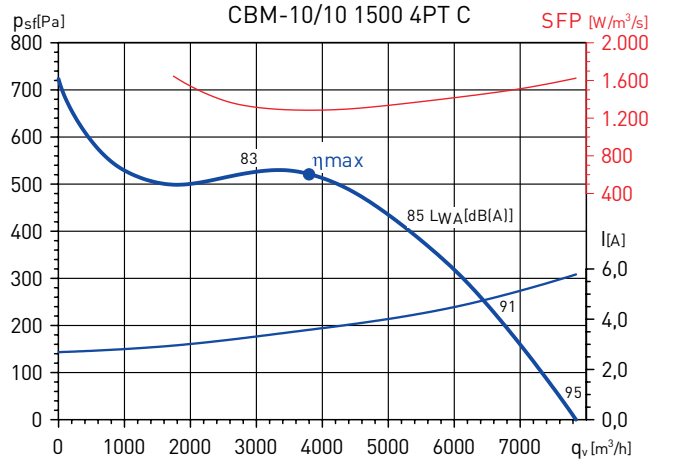

MC*	EC*	VSD*	SR*	η[%]*	N*	[kW]	[m³/h]	[Pa]	[RPM]
B	Total	No	1	45,7	51,2	1,355	3801	587	1462

* See exampe curve.

PERFORMANCE CURVES - THREE-PHASE MOTORS

- p_{sf}: Static pressure in Pa.
- q_v: Airflow in m^3/h and m^3/s.
- SFP: Specific fan power in $W/m^3/s$.
- I: Absorbed current A.
- Measurement category: B.
- Efficiency category: total.
- Fan efficiency without VSD.
- Air flow data in accordance with ISO 5801.

CBM-12/9 736 6PT C

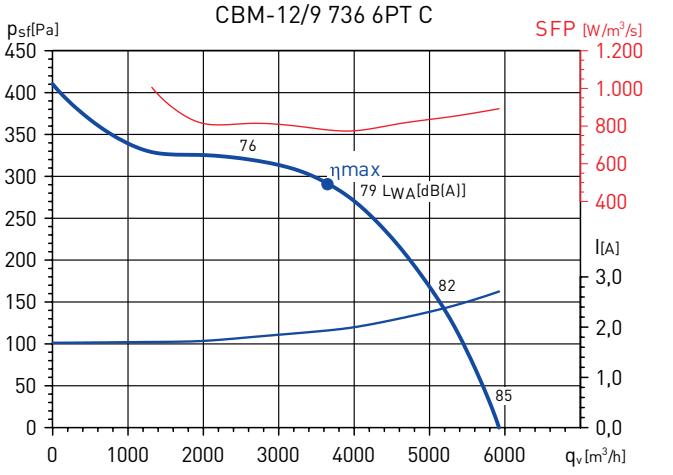

MC*	EC*	VSD*	SR*	η[%]*	N*	[kW]	[m³/h]	[Pa]	[RPM]
B	Total	No	1	44,9	51,9	0,784	3657	347	899

* See exampe curve.

CBM-12/9 1100 6PT

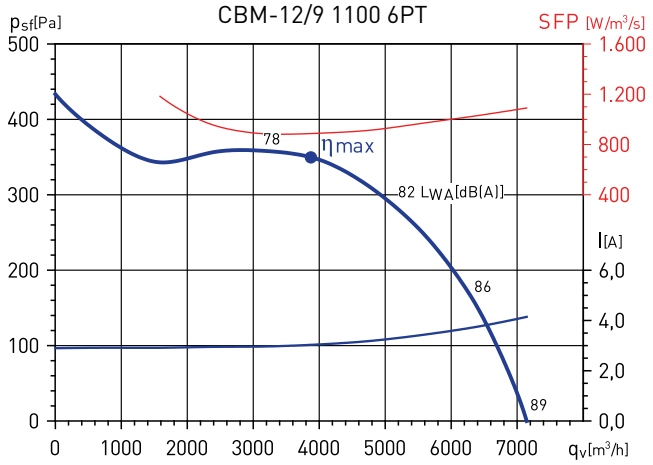

MC*	EC*	VSD*	SR*	η[%]*	N*	[kW]	[m³/h]	[Pa]	[RPM]
B	Total	No	1	43,1	49,2	1,097	3959	430	945

* See exampe curve.

CBM-12/12 1100 6PT C

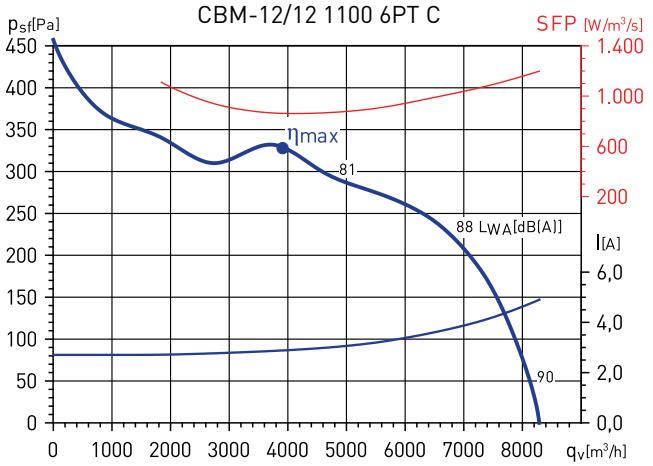

MC*	EC*	VSD*	SR*	η[%]*	N*	[kW]	[m³/h]	[Pa]	[RPM]
B	Total	No	1	43,0	49,5	0,942	3936	371	958

* See exampe curve.

CBM-15/15 2200 6PT C K

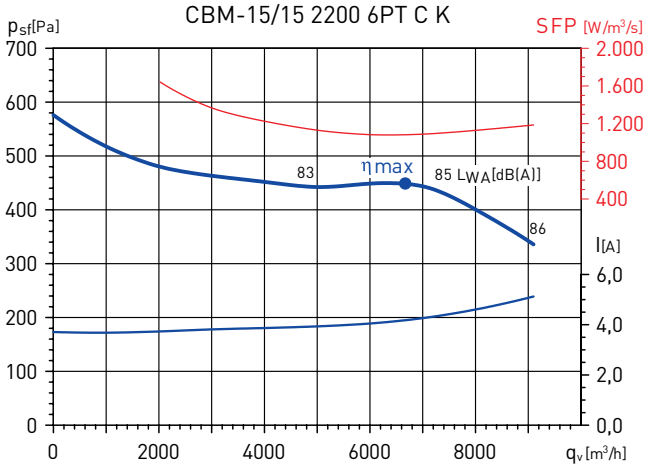

MC*	EC*	VSD*	SR*	η[%]*	N*	[kW]	[m³/h]	[Pa]	[RPM]
B	Total	No	1	46,7	51,1	2,009	6688	506	913

* See exampe curve.