

Emerg.stop label

Part no. M22-XYK1
Article no. 216484
Catalog No. M22-XYK1Q

Powering Business Worldwide

Delivery programme

Product range			RMQ-Titan (drilling dimensions 22.5 mm)
Basic function			Accessories
Basic function accessories			Emergency-stop labels
Single unit/Complete unit			Single unit
Form			50 x 50 mm
Inscription			NOT-AUS, EMERGENCY STOP, ARRÊT D'URGENCE, EMERGENZA
Name			Four languages
Language			de, en, fr, it
Colour			
			RAL 1004
RAL Value			RAL 1004
Protection type			IP66
Connection to SmartWire-DT			no

Notes

Lettering black

Approvals

North America Certification — UL/CSA certification not required

Technical data ETIM 5.0

Low-voltage industrial components (EG000017) / Text plate for control circuit devices (EC000624)
Electric engineering, automation, process control engineering / Low-voltage switch technology / Command and alarm device / Identification plate for command devices (ecl@ss8-27-37-12-25 [AKF043010])

Imprint			-
Imprint ISO symbols			-
Colour			Yellow
Shape			Square
Width		mm	50
Height		mm	50
Outer diameter		mm	0

Dimensions

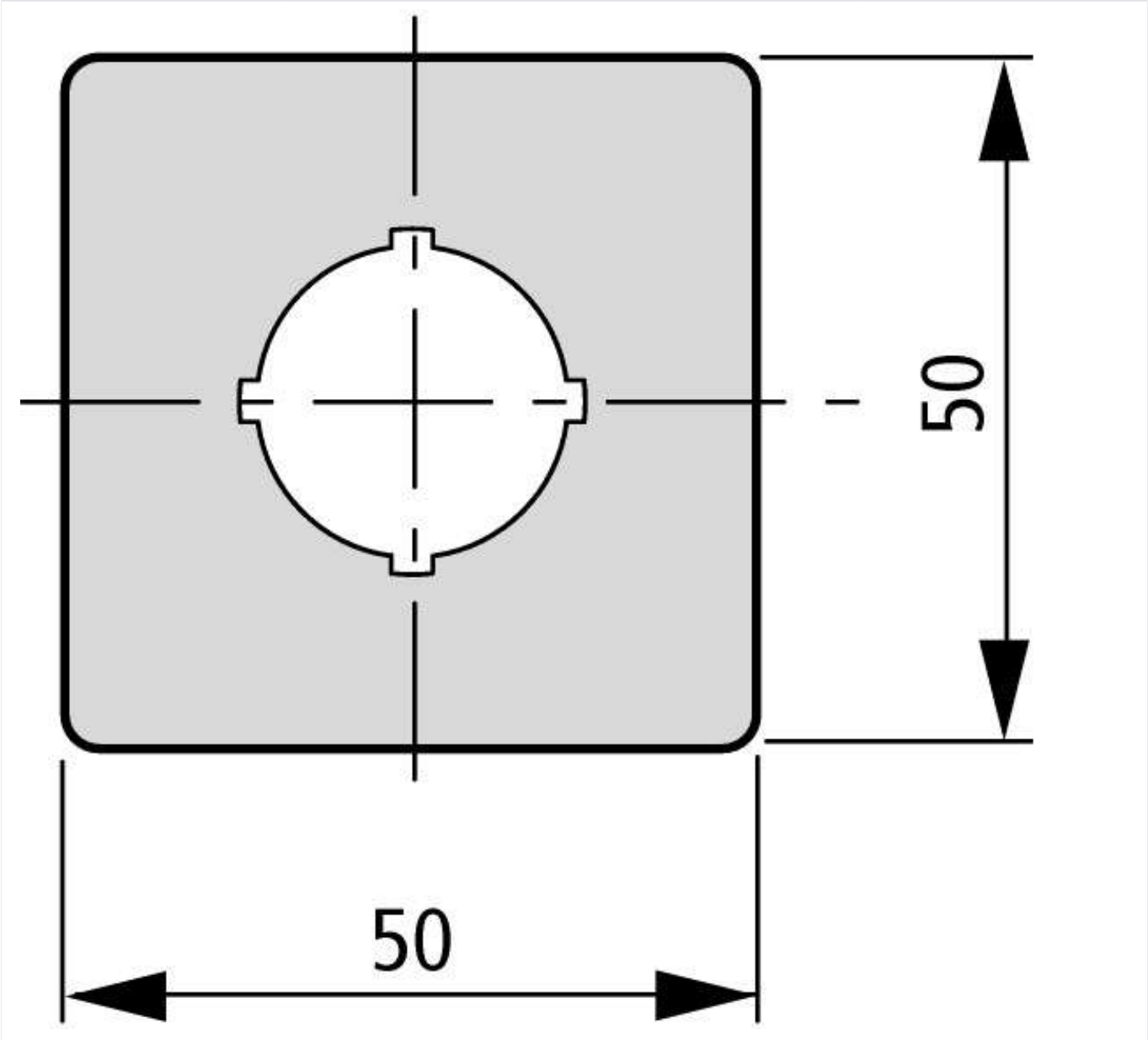

Additional product information (links)

IL04716002Z (AWA1160-1745) RMQ-Titan System	
IL04716002Z (AWA1160-1745) RMQ-Titan System	ftp://ftp.moeller.net/DOCUMENTATION/AWA_INSTRUCTIONS/IL04716002Z2013_08.pdf
Labeleditor	http://downloadcenter.moeller.net/de/software.f6023a63-5acb-42c7-a51c-ccf99091cace

© 11/2013 by Eaton Industries GmbH