87045 LIMOGES Cedex
Telephone : 05 55 06 87 87 – Fax : 05 55 06 88 88

XL³ 160 metal distribution cabinets

Cat. No. (s) : 20002/03/04/05/06/45/46

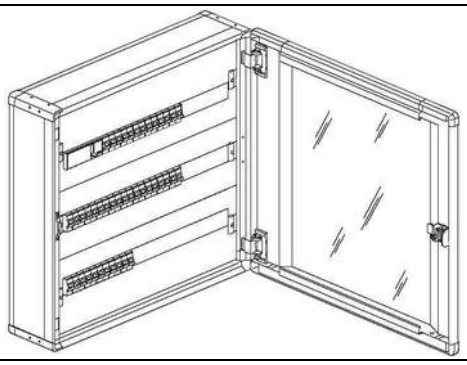

CONTENTS PAGE

1. General characteristics 1
2. Finish 1
3. Range 2
4. Overall dimensions 2
5. Equipment 3
6. Accessories 3

1. GENERAL CHARACTERISTICS

Ready-assembled metal distribution cabinets delivered complete with faceplates, removable chassis and ready-fitted rails.
Accommodates DPX 125 and Vistop 160 and inside fully modular space DPX 160. Capacity of 2 to 6 rows with 24 modules per row.
Reusable packaging.
Ingress protection against solids and liquids to standards IEC 60529 and NF EN 60529:
IP 30 without door
IP 40 with door
IP 43 with door, seal and insulated cable entry panel
Mechanical impact rating to standards NF EN 50102 and NF C20.015
IK 07 without door
IK 08 with door
Glow wire resistance 750° C / 5 s to IEC 60695-2
Maximum current strength: 160 A
Ipk: 35 kA

1-1 Structure

- Assembly of steel plate elements:
  -Rear panel
  - 4 individually removable steel side panels
  - 4 side panel support angles
  - Busbar, 36 holes 1.5 to 10 mm² and 2 holes 35 mm for protective conductor (supplied)
  - Multihead fastener set (PZ, slotted, H10 head)
  - 1 insulated cable entry panel used for IP 43 (supplied)
  -Wall-mounted by rear panel or by external mounting brackets (to be ordered separately).
  - Reversible metal doors with or without window, flat or curved, supplied with handle (without barrel), angle of opening 120° (to be ordered separately)
- Individually detachable side panels
- Removable chassis

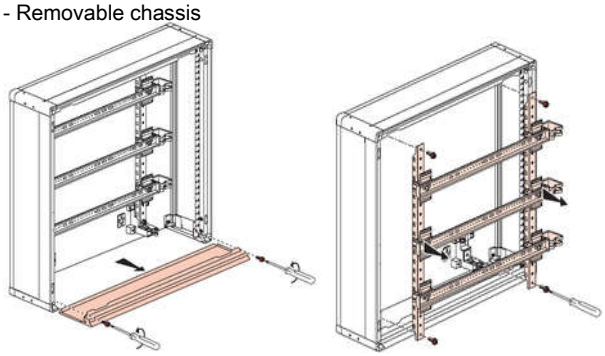

1. GENERAL CHARACTERISTICS (cont.)

1-2 Resistance to climatic conditions :

- Salt spray: 1000 h
- Operating temperature: 5°C to + 40° C
- Storage temperature: 10°C to + 70°C

1-3 Standards conformity

IEC 60529 EN 60529	Degree of protection provided by enclosures (IP code)
NFC 20-015 NF EN 50102	Degree of protection provided by enclosures of electrical equipment against external mechanical impact (IK code)
IEC 60439-1 NF EN 60439-1	Low voltage switchgear and controlgear assemblies
IEC 60439-3 NF EN 60439-3	Low voltage switchgear and controlgear assemblies

2. FINISH

2-1 Outer housing

- Rear panel in galvanized steel plate th. 10/10 mm
- Side panels in painted steel plate th. 10/10 mm colour grey RAL 7035
- Upper and lower panels in painted steel plate th. 10/10 mm colour grey RAL 7035
- Faceplate in painted steel plate th. 12/10 mm colour grey RAL 7035
- Metal door th. 12/10 mm colour grey RAL 7035 (to be ordered separately).

2-2 Coating

- Beige RAL 7035 epoxy polyester powder-coated paint coating thickness 50/70 µ.

3. RANGE

3-1 Metal cabinets

Removable chassis with mounting supports, top and bottom cable entry panels and faceplates. Cabinets Ref. 20045/46 are specially consecrated for the DPX 160 assembly.

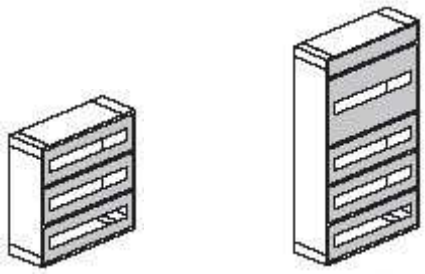

Height mm	Inside height mm	Inside width mm	Inside depth below faceplate mm	Weight Kg	Cat. No.
450	400	515	115	8,6	20002
600	550	515	115	11	20003
750	700	515	115	13,5	20004
900	850	515	115	16	20005/45
1050	1000	515	115	18,4	20006/46

4. OVERALL DIMENSIONS

Cat. No.	A	B	C without door	C flat door	C curved door	D	E
20002	450	575	147	170	190	910	720
20003	600	575	147	170	190	910	720
20004	750	575	147	170	190	910	720
20005/45	900	575	147	170	190	910	720
20006/46	1050	575	147	170	190	910	720

Note: Dimension C does not include the handle

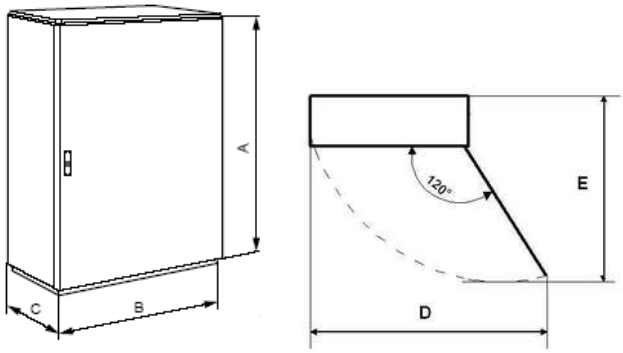

4. OVERALL DIMENSIONS (cont.)

4.1 Wall mounting

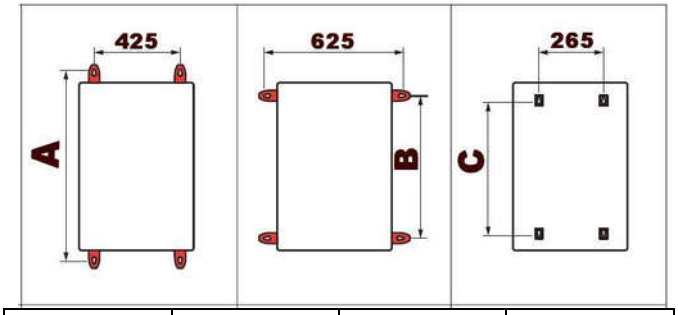

Cat. No.	A (mm)	B (mm)	C (mm)
20002	500	305	343
20003	650	455	493
20004	800	605	643
20005/45	950	755	793
20006/46	1100	905	943

4.2 Passthrough

- Removable chassis comprising two steel profiles with double perforation
- On front M6 tapped holes at 25 mm intervals for fixing rails in the upper or lower position

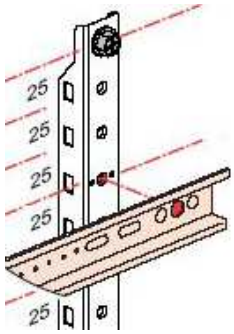

- Side perforations at 25 mm intervals for securing rail support brackets in upper position

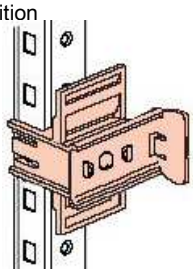

- Passthrough under rail and fixing plate

Rail	Cat. No.	345 mm x 50 mm upper position
	20000	345 mm x 22 mm lower position

5. EQUIPMENT

Sealable ¼-turn release faceplates

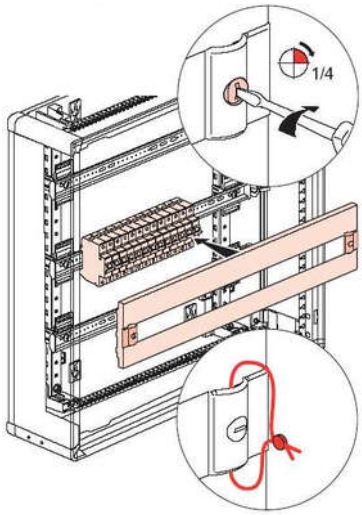

Reversible doors
supplied with handle
Interchangeable barrel (to be ordered separately)

Curved doors

Metal	Transparent	Height (mm)	Cabinet/door distance (mm)	
			Metal	Transparent
20252	20262	450	57	53
20253	20263	600	57	53
20254	20264	750	57	53
20255	20265	900	57	53
20256	20266	1050	57	53

Flat doors

Metal	Transparent	Height (mm)	Cabinet/door distance (mm)	
			Metal	Transparent
20272	20282	450	38	34
20273	20283	600	38	34
20274	20284	750	38	34
20275	20285	900	38	34
20276	20286	1050	38	34

6. ACCESSORIES

- Cat. No. 20051 Cutaway 24-module blanking plate
- Cat. No. 01665 Breakaway 18-module adjustable strip, separation by module or ½-module
- Cat. No. 20399 Clip-on adhesive label holder for 24 modules
- Cat. No. 37300 Brass terminal strip for protective conductor
- Cat. No. 04819 Flat bar 12 x 2 for terminal strips IP2X
- Cat. No. 20130 IP 43 seal

6. ACCESSORIES (cont.)

- Cat. No. 20000 Universal rail
- Cat. No. 26208 DPX 125 fixing plate
- Cat. No. 26209 DPX 160 fixing plate

- Cat. No. 26299 Rail spacer for combining modular devices and DPX 125/160 mounted on fixing plate. Capacity 20 modules

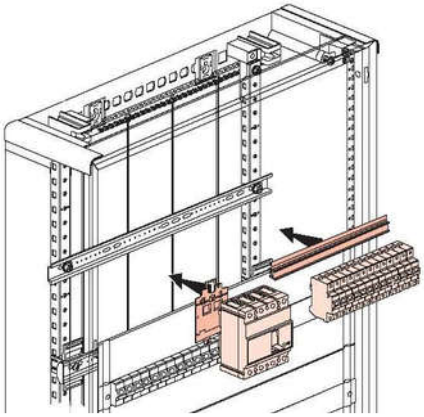

- Cat. No. 20100 Set of 4 metal wall-mounting lugs

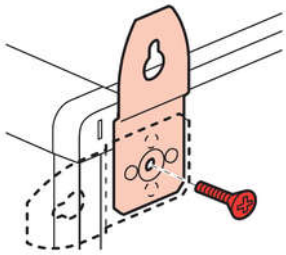

Door accessories

- Key barrels and knockout for metal or transparent doors, supplied with two keys
- Cat. No. 20291 Type 405
- Cat. No. 20292 Type 455
- Cat. No. 20293 Type 1242E
- Cat. No. 20294 Type 2433A

Adhesive transparent document holder
- Cat. No. 09799 Flexible plastic A4
- Cat. No. 36582 Rigid plastic IP 50

Paint spray
- Cat. No. 20098 RAL 7035

Cable guides
- Cat. No. 20094 For horizontal wiring
- Cat. No. 20093 For vertical wiring

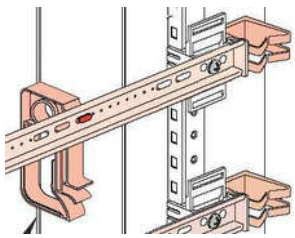

6. ACCESSORIES (cont.)

- Réf. 20070 Support de fixation pour goulotte Lina 25 (40 x 60)

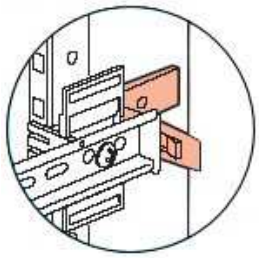

- Cat. No. 20050 Set of 2 supports for IP2X terminal strips, for bar Cat. No. 04819

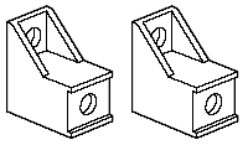

- Cat. No. 20160 Finishing strip for DLP / cabinet connection

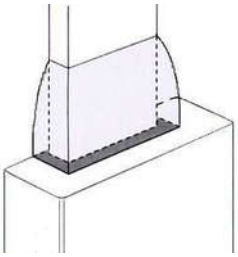

- Cat. No. 20021 Cable entry panel with direct feedthrough glands. 22 glands Ø 20, 2 glands Ø 32
- Cat. No. 20020 Cutaway panel

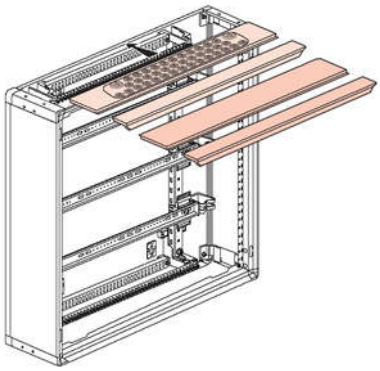

6. ACCESSORIES (cont.)

- Cat. No. 20035 Cable fixture support

