TIMKEN

The Timken Company
4500 Mt Pleasant St. NW
N. Canton, OH 44720
Phone: (234) 262-3000
E-Mail: CustomerCAD@timken.com • **Web site:** www.timken.com

Timken Part Number LM603049 - LM603011, Tapered Roller Bearings - TS (Tapered Single) Imperial

This is the most basic and most widely used type of tapered roller bearing. It consists of two main separable parts: the cone (inner ring) assembly and the cup (outer ring). It is typically mounted in opposing pairs on a shaft.



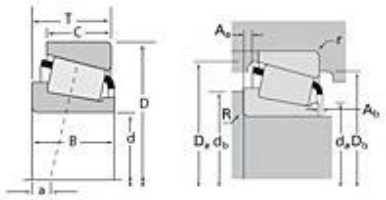

Specifications | Dimensions | Abutment and Fillet Dimensions | Basic Load Ratings | Factors

Specifications

Series	LM603000
Cone Part Number	LM603049
Cup Part Number	LM603011
Design Units	Imperial
Bearing Weight	0.80 lb 0.400 Kg
Cage Type	Stamped Steel

Dimensions

d - Bore	1.7812 in 45.242 mm
D - Cup Outer Diameter	3.0625 in 77.788 mm

B - Cone Width	0.7812 in 19.842 mm
C - Cup Width	0.5937 in 15.080 mm
T - Bearing Width	0.7812 in 19.842 mm

Abutment and Fillet Dimensions

R - Cone Backface "To Clear" Radius[1]	0.14 in 3.560 mm
r - Cup Backface "To Clear" Radius[2]	0.030 in 0.76 mm
da - Cone Frontface Backing Diameter	2.05 in 52.07 mm
db - Cone Backface Backing Diameter	2.28 in 57.91 mm
Da - Cup Frontface Backing Diameter	2.94 in 74.68 mm
Db - Cup Backface Backing Diameter	2.80 in 71.12 mm
Ab - Cage-Cone Frontface Clearance	0.08 in 2 mm
Aa - Cage-Cone Backface Clearance	0.03 in 0.8 mm
a - Effective Center Location[3]	-0.09 in -2.30 mm

Basic Load Ratings

C90 - Dynamic Radial Rating (90 million revolutions)[4]	4450 lbf 19800 N
C1 - Dynamic Radial Rating (1 million revolutions)[5]	17200 lbf 76300 N
C0 - Static Radial Rating	17500 lbf 77900 N
C_{a90} - Dynamic Thrust Rating (90 million revolutions)[6]	3250 lbf 14500 N

Factors

K - Factor[7]	1.37
e - ISO Factor[8]	0.43
Y - ISO Factor[9]	1.41
G1 - Heat Generation Factor (Roller-Raceway)	26.4
G2 - Heat Generation Factor (Rib-Roller End)	14.4
Cg - Geometry Factor	0.0785

[1] These maximum fillet radii will be cleared by the bearing corners.
[2] These maximum fillet radii will be cleared by the bearing corners.
[3] Negative value indicates effective center inside cone backface.
[4] Based on 90 x 10^6 revolutions L_{10} life, for The Timken Company life calculation method. C_{90} and C_{a90} are radial and thrust values.
[5] Based on 1 x 10^6 revolutions L_{10} life, for the ISO life calculation method.
[6] Based on 90 x 10^6 revolutions L_{10} life, for The Timken Company life calculation method. C_{90} and C_{a90} are radial and thrust values for a single-row, $C_{90(2)}$ is the two-row radial value.
[7] These factors apply for both inch and metric calculations. Consult your Timken representative for instruction on use.
[8] These factors apply for both inch and metric calculations. Consult your Timken representative for instruction on use.
[9] These factors apply for both inch and metric calculations. Consult your Timken representative for instruction on use.

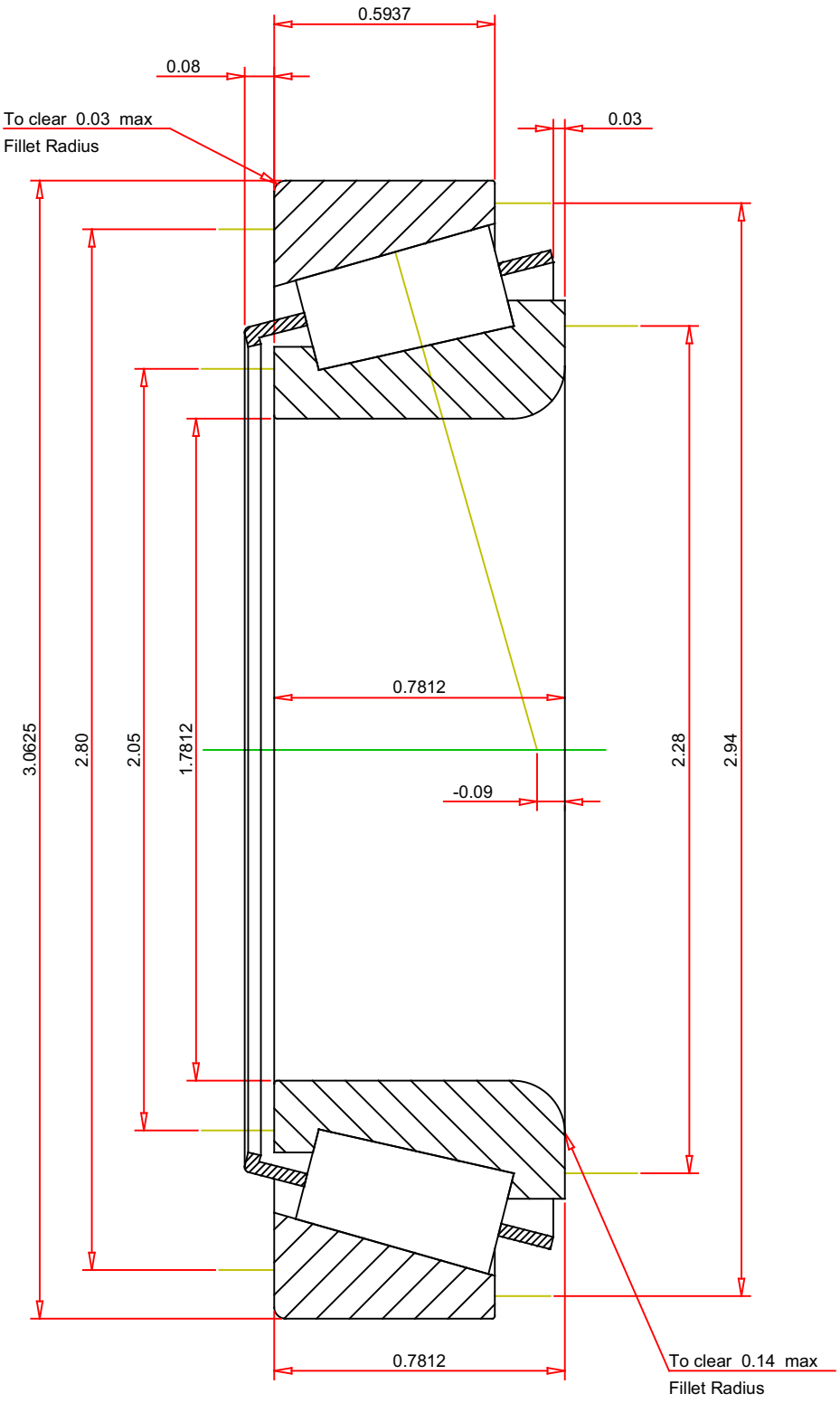

IMPERIAL UNITS

ISO Factor - e	0.43	
ISO Factor - Y	1.41	
Bearing Weight	0.8	lb
Number of Rollers Per Row	20	
Effective Center Location	-0.09	inch

TIMKEN®

THE TIMKEN COMPANY
NORTH CANTON, OHIO USA

LM603049 - LM603011
TS BEARING ASSEMBLY

K Factor	1.37	
Dynamic Radial Rating - C90	4450	lbf
Dynamic Thrust Rating - Ca90	3250	lbf
Static Radial Rating - C0	17500	lbf
Dynamic Radial Rating - C1	17200	lbf

Every reasonable effort has been made to ensure the accuracy of the information contained in this writing, but no liability is accepted for errors, omissions or for any other reason.

FOR DISCUSSION ONLY