

Legend plate label mount

Part no. M22S-ST-GB11
Article no. 216500

Catalog No. M22S-ST-GB11Q

Delivery programme

Product range			RMQ-Titan (drilling dimensions 22.5 mm)
Basic function			Accessories
Basic function accessories			Legend holder
Single unit/Complete unit			Single unit
			Complete
Width		mm	30
Height		mm	50
Design			Round
Colour			
			Black
RAL Value			RAL 9005
Inscription			MAN. AUTO
Protection type			IP66
Connection to SmartWire-DT			no

Approvals

North America Certification	UL/CSA certification not required

Technical data ETIM 5.0

Low-voltage industrial components (EG000017) / Text plate holder for control circuit devices (EC001032)
Electric engineering, automation, process control engineering / Low-voltage switch technology / Command and alarm device / Sign carrier for command devices (ecl@ss8-27-37-12-29 [AKF047010])

Width		mm	30
Height		mm	50
Hole diameter		mm	22
Width opening		mm	22
Height meter opening		mm	0
Colour			Black
Shape			Rectangular

Dimensions

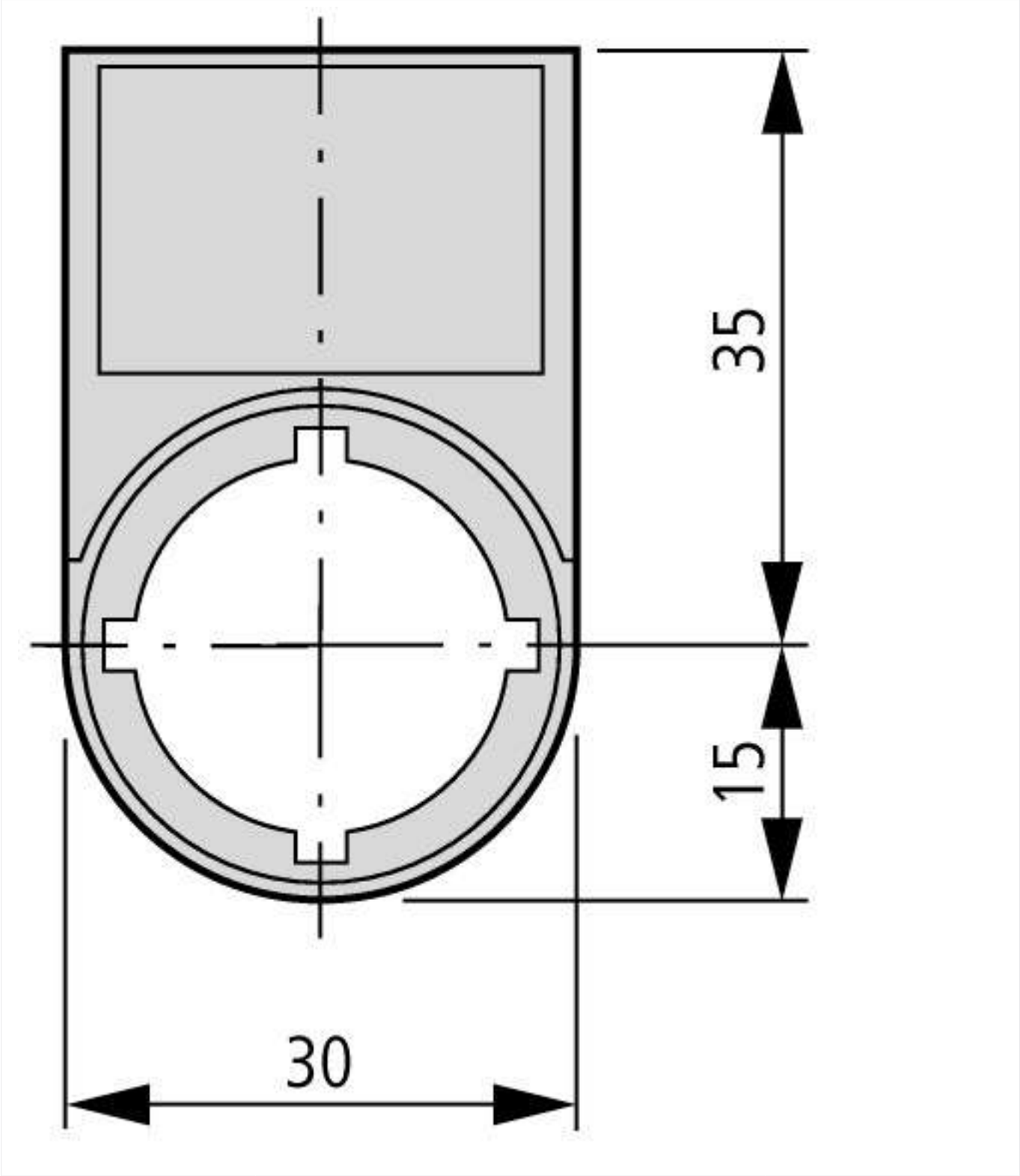
35
15
30

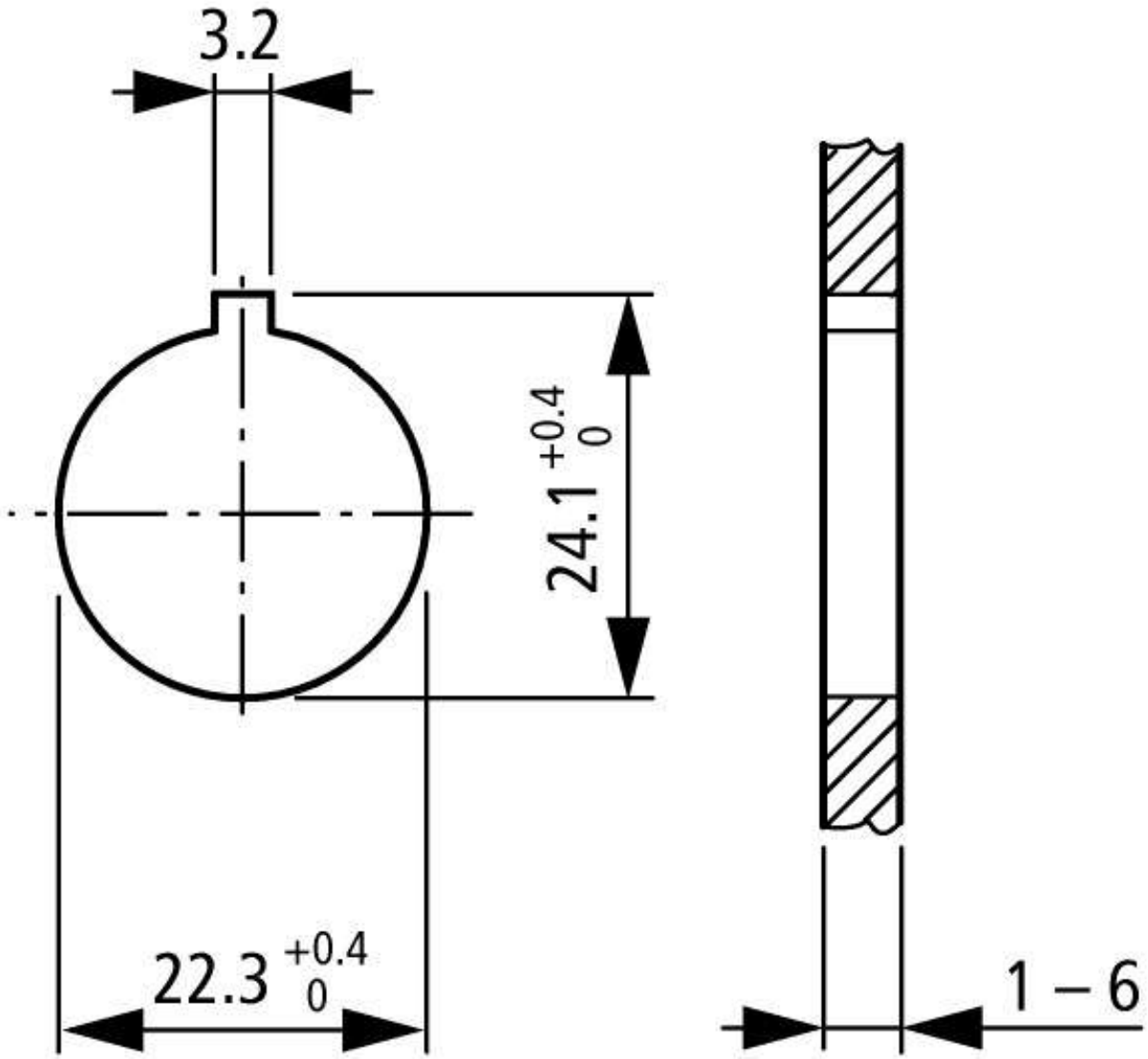

Mounting hole with lug slot
Actuating and indicator elements

Additional product information (links)

IL04716002Z (AWA1160-1745) RMQ-Titan System	
IL04716002Z (AWA1160-1745) RMQ-Titan System	ftp://ftp.moeller.net/DOCUMENTATION/AWA_INSTRUCTIONS/IL04716002Z2013_08.pdf

© 11/2013 by Eaton Industries GmbH