E37910

THERMOWELL, D6/2"CLAMP/L=100

Accessories

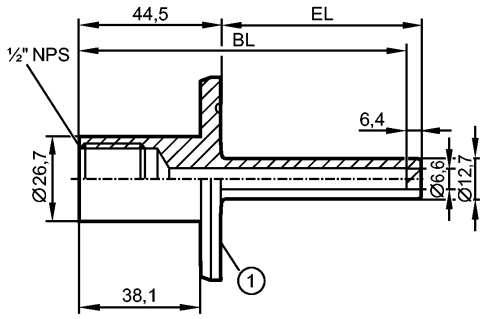

1: 2" clamp (ISO 2852)

3A EC 1935/2004 EHEDG Certified FDA

Product characteristics		
Thermowell for temperature sensors		
Ø 6 mm		
Environment		
Pressure rating	[bar]	25
Mechanical data		
Process connection		Clamp adapter 2" (ISO 2852)
for units with process connection		½" NPS (suitable for G ½ and ½" NPT)
Installation length EL	[mm]	64
Bore Length BL [mm]		101.6
Design		for temperature sensors with installation length EL = 100 mm
Housing materials		stainless steel 316L / 1.4404
Surface characteristics Ra / Rz of the wetted part(s)		≤ 0.6 / -
Weight	[kg]	0.284
Remarks		
Pack quantity	[piece]	1