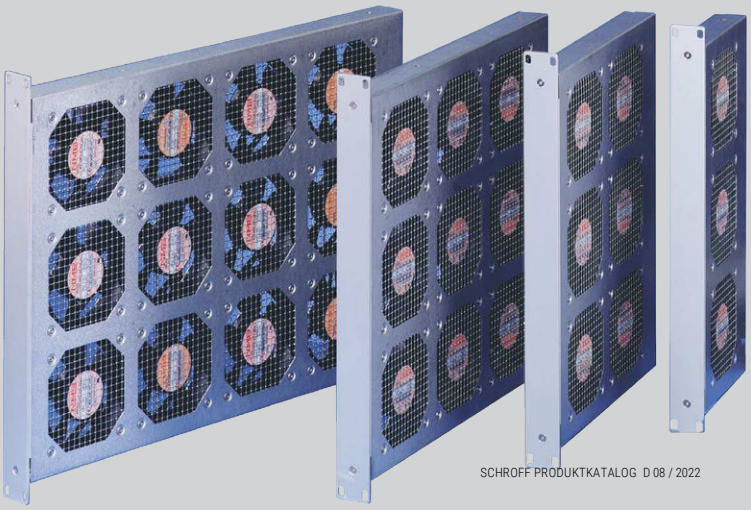

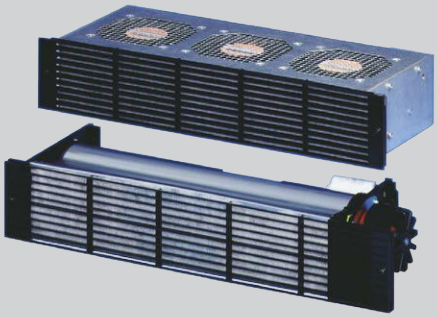

CONNECT AND PROTECT

19”-Fan Trays

08/2022

nVent

SCHROFF

Climate control – 19" fan trays

OVERVIEW

MAIN CATALOG

Cabinets 1

Wall mounted cases 2

Accessories for cabinets and wall mounted cases . . 3

Climate control . . 4

Electronics cases 5

Subracks/ 19" chassis 6

Front panels, plug-in units 7

Systems 8

Power supply units 9

Backplanes 10

Connectors, front panel component system 11

Appendix 12





01102012

STANDARDS/APPROVALS

- 19" assembly area in accordance with: IEC 60297-3-101
- Mechanical protection to DIN EN ISO 13857
  Contact protection to DIN EN ISO 13857
  Electrical safety to EN 60335 part 1
  Plastics self-extinguishing to UL 94 V0

AIRFLOW

VERTICAL AIRFLOW (CONTINUAL WARMING)

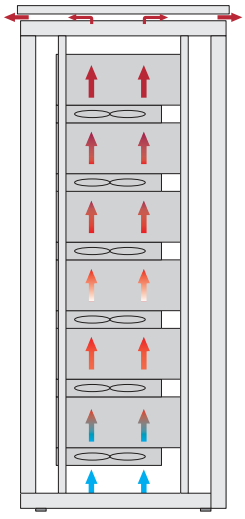

01109055

With vertical airflow the air becomes steadily warmer as it rises through the cabinet.

DIVERTED AIRFLOW (EFFECTIVE COOLING)

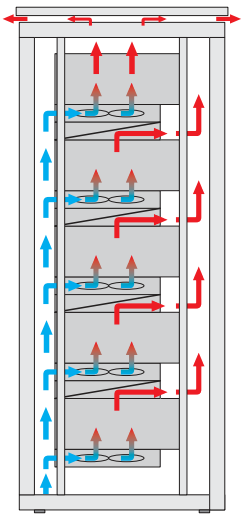

01109054

By using the 1 U airflow element, air is introduced from the front and extracted to the rear. Now all sub-assemblies receive the same cooling air.

Climate control – 19" fan trays

OVERVIEW

19" FAN TRAYS

- **To cool single components and assemblies in 19" cabinets**
- **High airflow rate for directed heat removal**
- **With axial or radial fans**
- **For voltages 230 V_{AC}, 115 V_{AC} or 24 V_{DC}**
- **CE- approvals**



19" FANS

- 19" circulation fan, height 1 U
- 230 V_{AC}, 115 V_{AC} and 24 V_{DC}
- Up to 1000 m^3/h
- With/without mains switch or with temperature-dependent speed control



19" PUSHER FANS

- Tangential fan, height 2 U
- 230 V_{AC} and 115 V_{AC}
- Up to 320 m^3/h



- 19" pusher fan, height 2 U
- 230 V_{AC} and 115 V_{AC}
- Up to 530 m^3/h



- 19" pusher fan, height 3 U
- 230 V_{AC} and 115 V_{AC}
- Up to 570 m^3/h
- Variable air outlet with/without pipe connection, upward or to rear

SERVICEPLUS

e.g. other airflow capacities
e.g. supply voltages
e.g. other dimensions
e.g. custom solutions

Overview **4.4**

19" fans
1 U with/without front switch **4.6**
1 U speed-controlled and monitored **4.8**

19" blower units
Pusher fan, 2 U with tangential blower . . **4.10**

Pressure fan, 2 U, (160, 220 mm deep) **4.11**

Pusher fan, 3 U. . . **4.13**

ServicePLUS configuration **4.15**

Accessories
19" airf **4.16**
AC fans **4.17**
DC fans **4.17**

Climate control – 19" fan trays

19" FAN 1 U



01194002

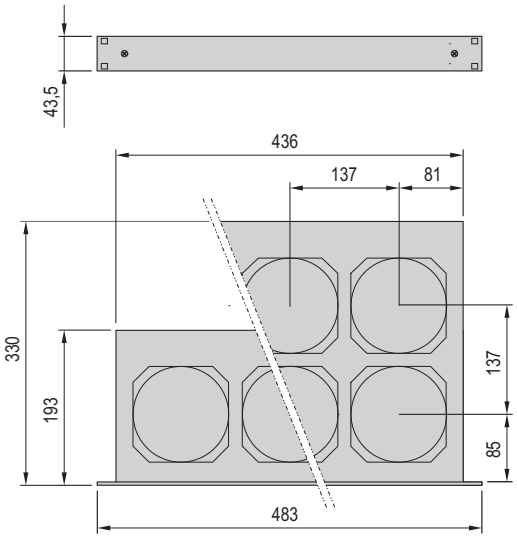

KTA44306

- Mechanical strain relief for mains cables
- Can be adapted to subracks
- Contact protection in accordance with DIN EN ISO 13857

CE

DELIVERY COMPRISES (ready to connect)

Item	Qty	Description
1	1	19" circulation fan, 1 U, cover/base plate, St, 1 mm, finish AlZn, with perforation; front panel 1 U, Al, 3 mm, anodised
2	3 / 6	Fan, see Order Information
3a	1	AC with IEC connector (mains input IEC 60320), incl. safety clamp for mechanical strain relief
b3	1	DC version with connecting cable, cable length 2.5 m

ORDER INFORMATION

	24 V_{DC} Part no.	115 V_{AC} Part no.	230 V_{AC} Part no.
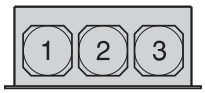 KTA44857	**10713-103**	**10713-102**	**10713-100**
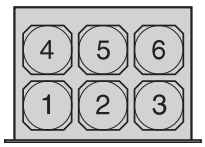 KTA44858	**10713-107**	**10713-106**	**10713-104**
Replacement fan 1 piece	**20713-240**	**20713-244**	**20713-243**
Side panel connecting bracket between europacPRO subrack and fan, including fixing material kit, PU 4 pieces			**21101-954**
Equipment cable SCHUKO/UTE SCHUKO/UTE plug, IEC 60320 C13 socket, 2.5 m, 1 piece			**60103-131**
Equipment cable, BS British Standard plug, IEC 60320 C13 socket, 2.5 m, 1 piece			**60103-137**
Equipment cable, USA USA plug, IEC 60320 socket, 2 m, 1 piece			**60103-141**

TECHNICAL DATA

Voltage	230 V_{AC}		115 V_{AC}		24 VC_{DC}
Frequency in Hz	50	60	50	60	-
Number of fans	3/6		3/6		3/6
Airflow volume in m^3/h (3/6 fans)	440/845	520/1000	440/845	520/1000	506/970
Noise level in dB(A) (3/6 fans)	56.5/59.4	60.2/62.9	56.5/59.4	60.2/62.9	60.5/63.3
Power consumption in W (3/6 fans)	45/90	42/84	46.5/93	43.5/87	24/48
Max. stat. pressure in Pa	73	88	73	88	68
Permissible ambient temperature in °C	−40 ... +70 °C				
Lifespan in h L_{10}40 °C	43500				
Lifespan in h L_{10}55 °C	20000				

NOTE

- Fan dimensioning see page 4.18
- Replacement fans see chapter Climate control - Accessories
- Versions with multiple fans see ServicePLUS configuration page 4.15

19" FAN 1 U WITH FRONT SWITCH



01194003



01197002

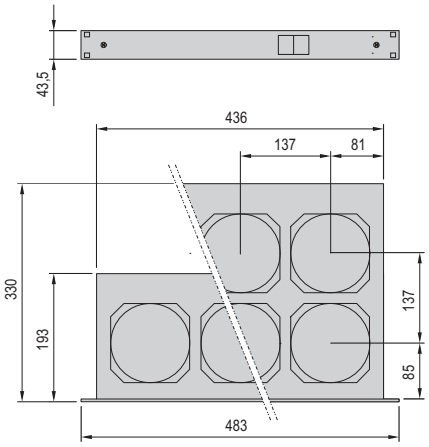

kta45963

- Front-mounted illuminated mains switch on AC devices, coupled with additional rear mains outlet; mechanical strain relief for mains input and mains output cables
- Can be adapted to subracks
- Contact protection in accordance with DIN EN ISO 13857

CE

DELIVERY COMPRISES (ready to connect)

Item	Qty	Description
1	1	19" circulation fan, 1 U, top/base plate, St, 1 mm, finish AlZn, with perforation; front panel 1 U, Al, 3 mm, anodised
2	3 / 6	Fan, see Order Information
3a	1	AC version with mains switch, illuminated green; plug (mains input IEC 60320) incl. safety clamp for mechanical strain relief; coupled mains output socket (IEC 60320)
b3	1	DC version with mains switch and connecting cable, cable length 2.5 m

ORDER INFORMATION

	24 V_{DC} Part no.	115 V_{AC} Part no.	230 V_{AC} Part no.
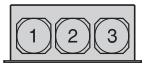 KTA44857	**10713-111**	**10713-110**	**10713-108**
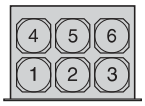 KTA44858	**10713-115**	**10713-114**	**10713-112**
Replacement fan 1 piece	**20713-240**	**20713-244**	**20713-243**
Side panel connecting bracket between europacPRO subrack and fan, including fixing material kit, PU 4 pieces			**21101-954**
Equipment cable SCHUKO/UTE SCHUKO/UTE plug, IEC 60320 C13 socket, 2.5 m, 1 piece			**60103-131**
Equipment cable, BS British Standard plug, IEC 60320 C13 socket, 2.5 m, 1 piece			**60103-137**
Equipment cable, USA USA plug, IEC 60320 socket, 2 m, 1 piece			**60103-141**
Mains cable, IEC IEC 60320 C14 plug, IEC 60320 C13 socket, 2.5 m, 1 piece			**60197-053**

TECHNICAL DATA

Voltage	230 VAC		115 VAC		24 VDC
Frequency in Hz	50	60	50	60	-
Number of fans	3/6		3/6		3/6
Airflow volume in m^3/h (3/6 fans)	440/845	520/1000	440/845	520/1000	506/970
Noise level in dB(A) (3/6 fans)	56.5/59.4	60.2/62.9	56.5/59.4	60.2/62.9	60.5/63.3
Power consumption in W (3/6 fans)	45/90	42/84	46.5/93	43.5/87	24/48
Max. stat. pressure in Pa	73	88	73	88	68
Permissible ambient temperature in °C	−40 ... +70 °C				
Lifespan in h L_{10}40 °C	43500				
Lifespan in h L_{10}55 °C	20000				

- Fan dimensioning, see page 4.18
- Replacement fans, see chapter Climate control - Accessories
- Versions with multiple fans see ServicePLUS configuration page 4.15

Part number in bold face type: ready for despatch within 2 working days
Part number in normal type: ready for despatch within 10 working days

Climate control – 19" fan trays

19" FAN 1 U, WITH SPEED CONTROL AND FUNCTION MONITORING



01198001

Photo shows 19" fan unit with 3 fans, without switch

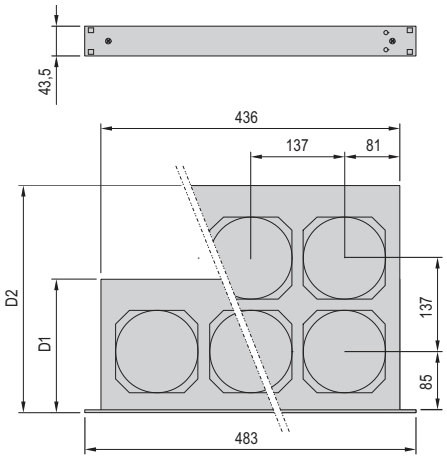

01107050

Airflow capacity with one fan

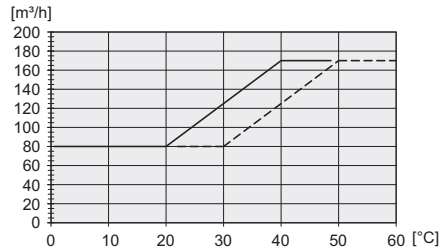

01112050

Monitoring signal

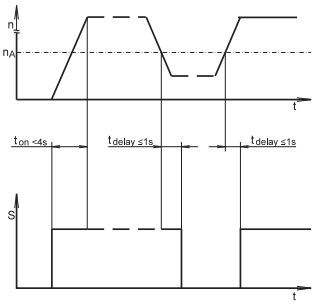

kta43400

n = rotating speed, S = signal, n_A = speed threshold value "Alarm"

- Low noise through temperature dependent airflow volume
- Range selectable: 20 ... 40 °C and 30 ... 50 °C
- External sensor, at sensor breakage max speed will be set automatically
- Function control with LEDs and via potential-free contact
- Contact protection in accordance with DIN EN ISO 13857
- 2 versions, 24 V_{DC} or 230 V_{AC}

CE

DELIVERY COMPRISES (ready for connection)

Item	Qty	Description
1	1	19" circulation fan, 1 U; cover/base plate, St, 1 mm, finish Al-Zn, with perforation front panel 1 U, Al, 3 mm, anodised
2	3 / 6	DC fan, see Order information
3	1	Connecting cable, length 2.5 m, open-ended
4	1	Temperature sensor for speed control, NTC resistor, cable length 1.5 m

ORDER INFORMATION

	24 V_{DC} D mm	Without switch Part No.	230 V_{AC} D mm	With switch Part No.	Without switch Part No.
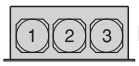 D1	193	**10713-099**	250	19713-121	–
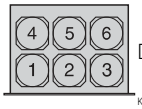 D2	330	**10713-098**	397	–	**19713-006**

Accessories

Filter mat, class G 2 for 3 fans, PU 3 pieces	**60713-169**
Filter mat, class G 2 for 6 fans, PU 3 pieces	**60713-170**

TECHNICAL DATA

Voltage AC version (fans 24 V_{DC})	86 ... 260 V_{AC}	
Voltage DC version	24 V_{DC} (21 ... 27)	
Number of fans	3	6
Max. airflow volume in m^3/h	467	895
Noise level in dB(A)	63.5	66.4
Max. stat. pressure in Pa	70	70
Power consumption in W	15.9	31.8 W
Permissible ambient temperature °C	–20 ... +65 °C	
Life in h L_{10}40 °C	70000	

Technical data Regulation/monitoring

Control range	Changeover switch between 20 ... 40 °C and 30 ... 50 °C
Sensor	External NTC resistor, cable length 1.5 m
Sensor connector	Rear-mounted plug contact, max. rotation speed in case of sensor breakage
Signal at	Speed < 30 % nominal speed; switch-on delay < 4 s, signal delay < 1 s (see monitoring signal)
Signalling	Display via LEDs; potential-free contact (changeover), switching capacity 5 W, max. switching voltage 170 V, open collector on request

- Fan dimensioning see page 4.18

Climate control – 19" fan trays

19" FAN UNIT, 1 U, REMOTE CONTROL AND MONITORING, 6 FANS, 100-240 V_{AC}



10713-554_front

Front view



10713-554_rear

Rear view



10713-554_Front_detail

Front view detail

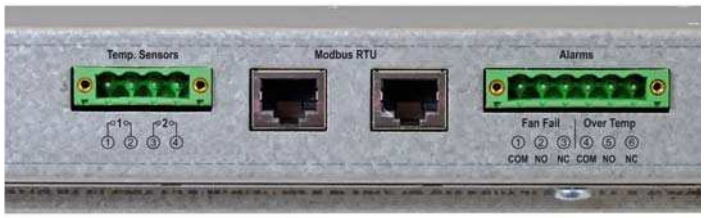

10713-554_rear_detail

Rear view detail

- Fan speed temperature controlled
- ModBus Interface for Remote Monitoring and Control
- Temperature threshold for the fan control adjustable on the front panel
- Signaling of fan failure and over temperature by 2 LEDs and potential-free relay outputs
- Integrated power supply with wide range input (100 V_{AC} ... 240 V_{AC})
- Less than 1 U (42 mm) to enable mounting on sliding guide rails or drawer
- 2 NTC temperature sensors with cables included

RoHS COMPLIANT

DELIVERY INCLUDES

Item	Quantity	Description
1	1	Front panel, 1 U, Al, 2 mm, anodised
2	1	Case with mesh grid, St, 1 mm, Steel, zink coated
3	6	DC fan
4	2	Removable 19" flanges
5	2	Temperature sensor for speed control, NTC resistor, cable length 2 m

ORDER INFORMATION

Description	Part no.
19" Fan Unit, 1 U, Remote Control and Monitoring, 6 Fans, 100-240 V_{AC}	**10713-554**
Accessories	
Equipment cable BS British Standard plug, IEC 60320 C13 socket, 2.5 m, 1 piece	**60103-137**
Equipment cable USA USA plug, IEC 60320 socket, 2 m, 1 piece	**60103-141**
Mains cable, IEC : for locking tab IEC 60320-C14 plug, IEC 60320 C13 socket, 1 m, 1 piece	**60110-361**
Mains cable, IEC IEC 60320 C14 plug, IEC 60320 C13 socket, 2.5 m, 1 piece	**60197-053**
Equipment cable, SCHUKO/UTE - IEC 320, angled, SCHUKO/UTE connector / plug, IEC 320 female connector, 2,5 m, 1 piece	**60704-020**
Mains cable, SCHUKO/UTE, SCHUKO/UTE plug, IEC 60320 socket, 2.5 m, 1 piece	**62150-191**
Guardian Management Gateway 1 U, width 250 mm, depth 45 mm, 1 piece	**11079-000**

TECHNICAL DATA

Voltage	100 ... 230 V_{AC}
Power	110
Airflow in m^3/h	1089
Noise level in dB (A)	59.5
Max. static pressure in Pa	78
Ambient temperature in °C	-10 ... +70 °C
Lifespan in h L_{10}40 °C	99558

Part number in bold face type: ready for shipping within 2 working days
Part number in normal type: ready for shipping within 10 working days

Climate control – 19" fan trays

PUSHER FAN, 2 U, WITH TANGENTIAL FAN



01192009

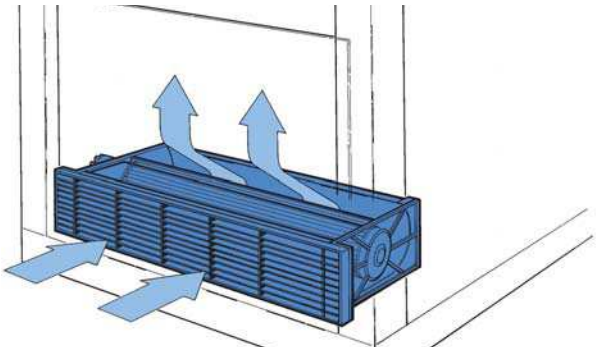

A3532

- High airflow volume
- Integrated filter mat
- 2 versions:
  - LE1: 19" bolt-on dimension, fan unit is wider than 19"
  - LE2: 19" reduced width, for easy assembly

DELIVERY COMPRISES (ready to connect)

Item	Qty	Description
1	1	Blower unit 2 U, with grille, PA 6.6, UL 94 V-0, front grille 2 U, PPO, UL 94 V-0; filter mat, synthetic fibre, filter class G 2
2	1	Fan
3	1	Terminal block

ORDER INFORMATION

Description	115 V_{AC} Part no.	230 V_{AC} Part no.
LE1: Pusher fan 2 U, tangential blower	**60713-003**	**60713-001**
LE2: Pusher fan 2 U, tangential blower	**60713-004**	**60713-002**
Spare filter mat PU 10 pieces		**20705-008**

DIMENSIONS

Voltage	115 V_{AC}		230 V_{AC}	
Frequency in Hz	50	60	50	60
Airflow volume in m^3/h	320	330	320	330
Noise level in dB(A)	59	62	59	62
Max. stat. pressure in Pa	65	70	65	70
Power consumption in W	30	40	37	46
Permissible ambient temperature in °C	−20 ... +65 °C			
Lifespan in h	30000			

NOTE

- 24 V_{DC} on request
- Fan dimensioning, see page 4.18

LE 1

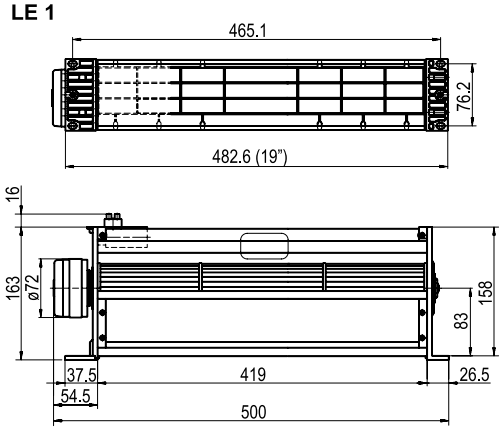

LE 2

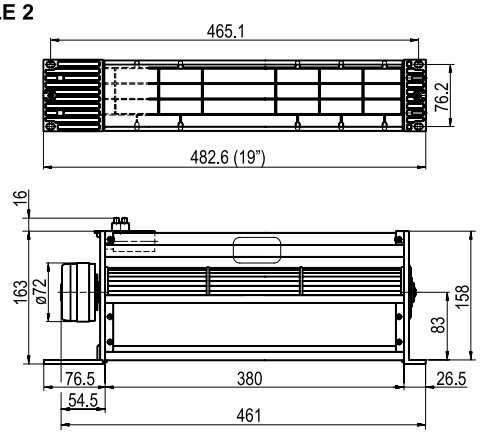

01103056

Climate control – 19" fan trays

19" PUSHER FAN 2 U (DEPTH 160 MM OR 220 MM)



01194005

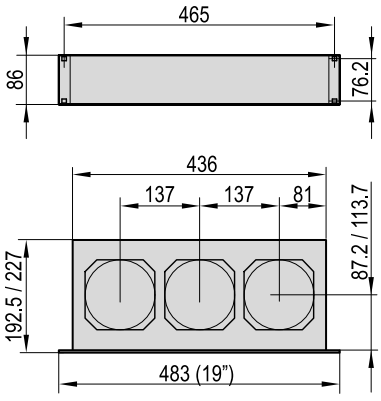

01103054

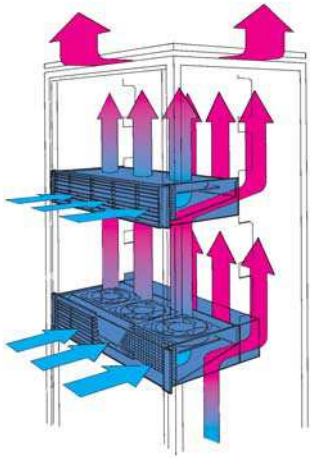

A3527V

- Integrated air deflector prevents heat buildup in the assemblies mounted below
- Optionally with rear additional fan, 2 U, for active cooling of assemblies beneath the pusher fan
- Can be adapted to subracks
- Contact protection in accordance with DIN EN ISO 13857

CE

DELIVERY COMPRISES (ready to connect)

Item	Qty	Description
1	1	19" pusher fan 2 U, case, St, 1 mm, finish Al-Zn; front grille 2 U, PPO, UL 94 V-0 Filter mat, synthetic fibre, filter class G 2
2	3	Fan
3a	1	AC-version with plug (mains input, IEC 60320), incl. safety clamp, mechanical strain relief for mains input cable; socket to connect an optional supplementary fan
3b	1	Wide AC input range with DC fans, version as 3 a, additionally speed-controlled and monitored
3c	1	DC version with connecting cable, cable length 2.5 m

NOTE

- Supplementary fan for AC version see page 4.12
- Fan dimensioning, see page 4.18

ORDER INFORMATION

Description	Front panel Al, anodised 86 ... 260 V_{AC} (fan 24 V_{DC}) 515 m^3/h Part no.	Front panel, plastic, black 24 V_{DC} 515 m^3/h Part no.	115 V_{AC} 300/330 m^3/h Part no.	115 V_{AC} 445/530 m^3/h Part no.	230 V_{AC} 300/330 m^3/h Part no.	230 V_{AC} 445/530 m^3/h Part no.
For board depth 160 mm	19713-540	**10713-537**	10713-520	**10713-536**	**10713-518**	**10713-534**
For board depth 220 mm	–	**10713-529**	–	–	–	**10713-526**
Replacement fan piece	**20713-240**	**20713-240**	**20713-147**	**20713-244**	**20700-001**	**20713-243**
Equipment cable SCHUKO/UTE SCHUKO/UTE plug, IEC 60320 C13 socket, 2.5 m, 1 piece						**60103-131**
Equipment cable BS British Standard plug, IEC 60320 C13 socket, 2.5 m, 1 piece						**60103-137**
Equipment cable USA USA plug, IEC 60320 socket, 2 m, 1 piece						**60103-141**
Side panel connecting bracket between europac subrack, including fixing material kit						**21101-104**
Side panel connecting bracket between europacPRO subrack and fan, including fixing material kit, PU 4 pieces						**21101-954**
Spare filter mat PU 3 pieces						**60713-501**

Technical data with 3 fans

Voltage	**24 V_{DC}**	**24 V_{DC}**	**115 V_{AC}**				**230 V_{AC}**			
Frequency in MHz	-	-	50	60	50	60	50	60	50	60
Airflow volume in m^3/h	515	515	300	330	445	530	300	330	445	530
Noise level in dB(A)	59.8	59.8	52.2	56.1	55.2	58.2	52.2	56.1	55.2	58.5
Max. stat. pressure in Pa	68	68	41	41	78	88	41	41	78	88
Power consumption in W	24	24	42	33	46.5	43.5	42	33	45	42
Permissible ambient temperature in °C	–20 ... +70 °C	–20 ... +70 °C	–40 ... +70 °C				–40 ... +70 °C			
Life in h, [1] at 40 °C, [2] at 55 °C	20000 [2]	20000 [2]	50000 [1]		20000 [2]		50000 [1]		20000 [2]	

Part number in bold face type: ready for shipping within 2 working days
Part number in normal type: ready for shipping within 10 working days

Climate control – 19" fan trays

SUPPLEMENTARY FANS WITH HOUSING FOR PUSHER FAN 2 U



01194006

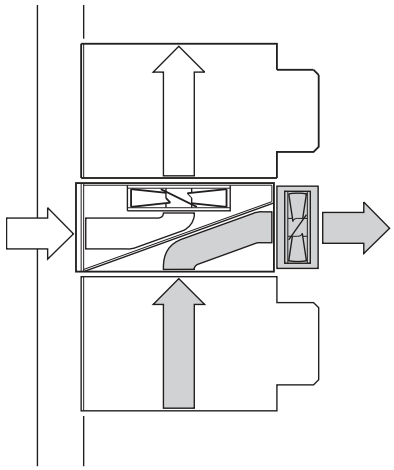

KTA44447

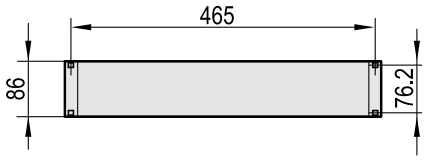

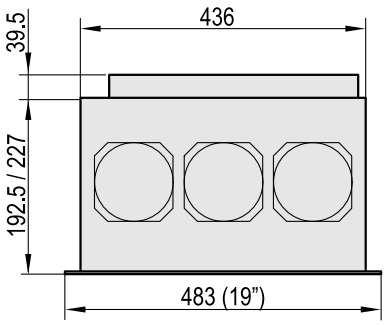

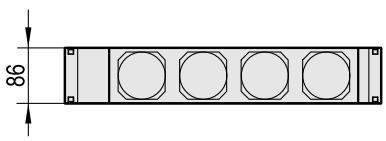

01103055

- Extra 2 U useable space:
  By using a built-on fan, components mounted below the 19" pusher fan can be cooled
- No additional voltage supply necessary: connection is via 19" pusher fan, 2 U
- Contact protection in accordance with DIN EN ISO 13857

CE

DELIVERY COMPRISES (ready to fit and connect)

Item	Qty	Description
1	1	Housing with grille, St, 1 mm, finish AlZn
2	4	Fan
3	1	Cable with plug (electrical connection via socket on 19" blower fan); safety clamp (mechanical strain relief for mains input cable)

ORDER INFORMATION

Description	230 V_{AC} Part no.
Supplementary fans with housing for pusher fan 2 U	**10713-530**

TECHNICAL DATA with 3 fans

Voltage	230 VAC	
Frequency in MHz	50	60
Airflow volume in m^3/h	130	155
Noise level in dB(A)	51	54
Max. stat. pressure in Pa	44	62
Permissible ambient temperature in °C	-40 ... +70	
Power consumption in W	27	21
Life in h at 55 °C	20000	

NOTE

- 24 V_{DC} version available on request
- Fan dimensioning see page 4.18

Climate control – 19" fan trays

19" PUSHER FAN 3 U



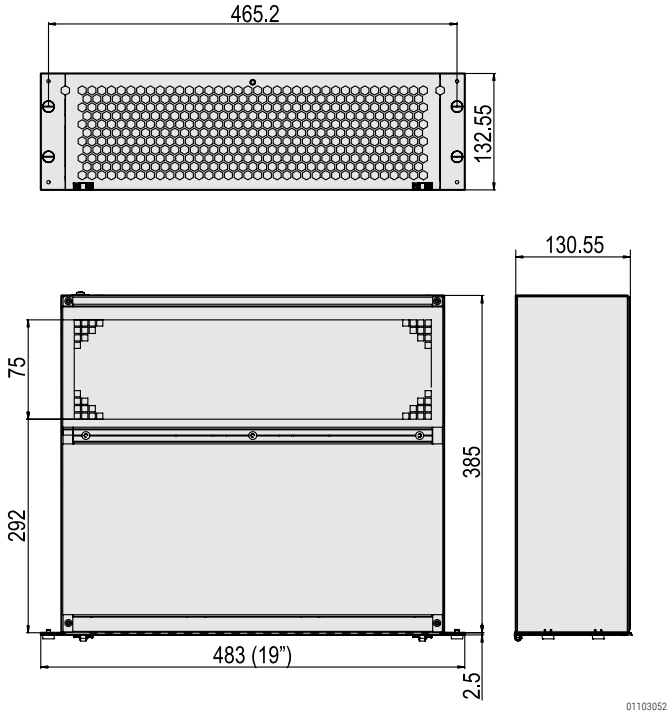

With cover plates, this pusher fan can be re-fitted to different cooling concepts

- Ventilation directed accurately to the electronics
- Air infeed from front, air exits at the top rear of cabinet (guided upwards by cover plates or via hoses to rear and upwards)
- Contact protection in accordance with DIN EN ISO 13857

CE

DELIVERY COMPRISES (ready for connection)

Item	Qty	Description
1	1	Case, St, 1 mm, AlZn; perforated hinged front panel, Al, 2.5 mm; filter mat, synthetic fibre, filter class G 2 in accordance with DIN EN 779
2	1	Radial fan with mains fuse
3	1	Plug (mains input, IEC 60320); safety clamp, mechanical strain relief for mains input cable

ORDER INFORMATION

Description	115 V_{AC} Part no.	230 V_{AC} Part no.
19" pusher fan 3 U	**10713-547**	**10713-546**
Accessories		
Equipment cable SCHUKO/UTE SCHUKO/UTE plug, IEC 60320 C13 socket, 2.5 m, 1 piece		**60103-131**
Equipment cable, BS British Standard plug, IEC 60320 C13 socket, 2.5 m, 1 piece		**60103-137**
Equipment cable, USA USA plug, IEC 60320 socket, 2 m, 1 piece		**60103-141**
Side panel connecting bracket between europac subrack and fan, including fixing material kit, PU 4 pieces		**21101-958**
Side panel connecting bracket between europacPRO subrack and fan, including fixing material kit, PU 4 pieces		**21101-954**
Spare filter mat PU 3 pieces		**60713-868**

TECHNICAL DATA

Voltage	115 VAC		230 VAC	
Frequency in MHz	50	60	50	60
Airflow volume in m^3/h	510	570	510	570
Noise level per fan in dB(A)	62	64	62	64
Max. stat. pressure in Pa	320	410	320	410
Power consumption in W	55	65	58	75
Max. ambient temperatures in °C	-20 ... +50		-20 ... +50	
Life in h at 55 °C	20000		20000	

NOTE

- Wide input voltage range 90 V ... 260 V_{AC} available on request
- Temperature control and function monitoring (alarm via RS 232) on request
- Air deflector plates for other cooling concepts see page 4.14
- Fan dimensioning see page 4.18

Part number in bold face type: ready for shipping within 2 working days
Part number in normal type: ready for shipping within 10 working days

AIR DEFLECTOR PLATE FOR 19" PUSHER FAN 3 U

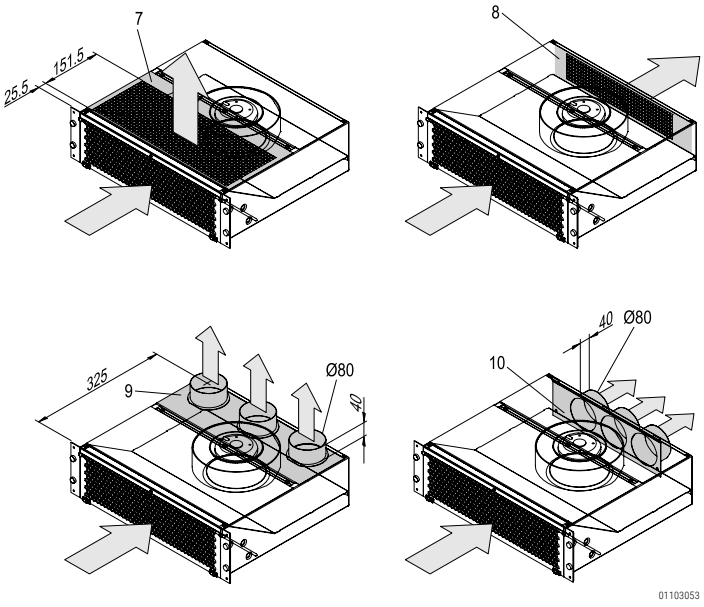

- For 19" pusher fan 3 U

ORDER INFORMATION

Item	Description	Qty/PU	Part no.
7	Air deflector plate to front, St, 1 mm, finish AlZn	1	20713-504
8	Air outlet to rear: upper cover plate, without perforation, 1 mm, finish AlZn	1	20713-505
9	Air deflector plate with hose connection on upper rear, external diameter 80 mm, St, 1 mm, finish AlZn	1	20713-503
10	Air deflector plate with hose connection to rear, external diameter 80 mm, St, 1 mm, finish AlZn	1	20713-502

CONNECTING CABLE WITH CONNECTOR SOCKET

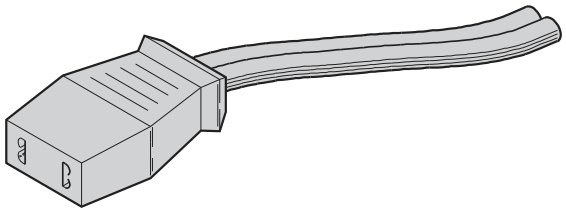

- Connecting cable with connector for AC fans (25 mm and 38 mm height) and DC fans (38 mm height), cable length 1 m

DELIVERY COMPRISES

Item	Qty	Description
1	1	Cable, PVC (2 x 0.75 mm²), 1 m long, with 2 FASTON connectors 2.8 x 0.5 mm, DIN 46343 T1

ORDER INFORMATION

Description	Part no.
Connecting cable with plug	**21101-246**

Climate control – 19" fan trays

SERVICEPLUS: CONFIGURATION WITH ASSEMBLY



- You can plan and build up your product yourself using the order information table below
- Dimensions of fan trays
  - Height 1 U
  - Width 19"
  - Depth 193, 300, 467, 604 mm for 3, 6, 9 or 12 fans
- Create your 19" fan trays from individual parts (assembled within 10 working days)

Example configuration

Qty	Description	Order no.
1	Housing, 1 piece	20713-213
1	Front panel with switch, AC, 1 piece	20713-231/05
1	Filter mat, 1 piece	60713-246/05
6	Fan, AC, height 25 mm; mounted at position 1, 3, 5, 7, 9, 11	20700-001/05

ORDER INFORMATION

	Fan height	Fan housing 1)	Front panel without switch		Front panel with switch		Filter mat G 2	Fans
			AC (230 V)	DC	AC (230 V)	DC		
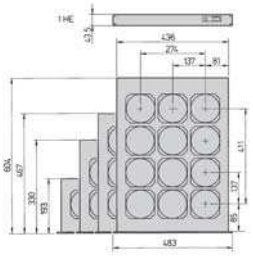 a44537		cover/base plate, St, 1 mm, finish AlZn, with perforation	1 U, Al, 3 mm, anodised; includes cable harness	1 U, Al, 3 mm, anodised; connecting cable, 2.5 m; includes cable harness	1 U, Al, 3 mm, anodised; mains switch, illuminated green; includes cable harness	1 U, Al, 3 mm, anodised; mains switch, illuminated green; connecting cable, 2.5 m; includes cable harness	can only be fitted where fan height is 25 mm	
	mm	1 piece	1 piece	1 piece	1 piece	1 piece	PU 3 pieces	see page
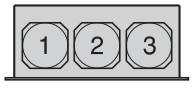 KTA44857	25	20713-212	20713-220/05	20713-224/05	20713-228/05	20713-236/05	**60713-243**	4.17
	38	20713-216	20713-220/05	20713-224/05	20713-228/05	20713-236/05	–	4.17
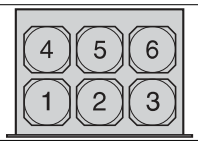 KTA44858	25	20713-213	20713-221/05	20713-225/05	20713-229/05	20713-237/05	**60713-244**	4.17
	38	20713-217	20713-221/05	20713-225/05	20713-229/05	20713-237/05	–	4.17
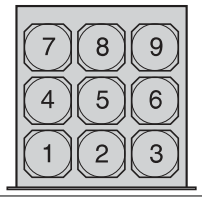 kta44859	25	20713-214	20713-222/05	20713-226/05	20713-230/05	20713-238/05	**60713-245**	4.17
	38	20713-218	20713-222/05	20713-226/05	20713-230/05	20713-238/05	–	4.17
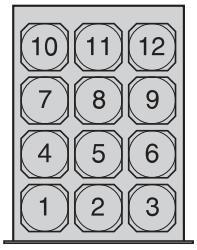 kta44860	25	20713-215	20713-223/05	20713-227/05	20713-231/05	20713-239/05	**60713-246**	4.17
	38	20713-219	20713-223/05	20713-227/05	20713-231/05	20713-239/05	–	4.17

1) Fan housing cannot be ordered without fans

NOTE

- Unused fan mounting positions are covered with foam material
- Versions for 115 V or with switch available on request
- Fan dimensioning see page 4.18

Part number in bold face type: ready for shipping within 2 working days
Part number in normal type: ready for shipping within 10 working days

1 U AIR DEFLECTOR CHASSIS FOR 19" FAN TRAYS



01109001



01109002

1 U air deflector chassis (bottom) with 1 U fan tray (top)

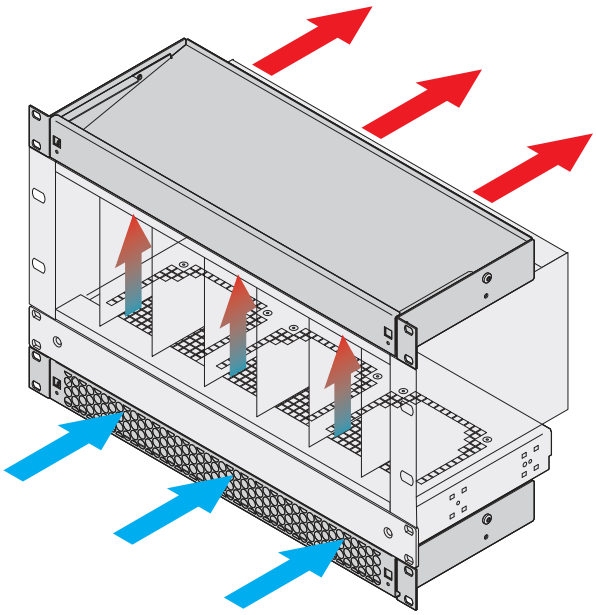

01109051

Application: air deflector chassis mounted below 19" fan tray, guides the cool air upwards from front; second air deflector chassis at top guides the warm air to the rear

- Optimised cooling together with 19" fan trays
- Vertical buildup of heat is avoided by means of improved airflow
- Fitting options:
  - One fan tray: cool air is drawn in from the front and guided upwards
  - Two fan trays: cool air is drawn in from the front, directed upwards and guided to the rear (see application diagram)
- Versions:
  - With solid front panel to direct airflow
  - With perforated front panel to allow air to flow in/out
- Optional filter mat, simple to swap during operation

DELIVERY COMPRISES (assembled)

Item	Qty	Description
1	1	Air deflector plate, St, 1 mm, finish Zincor, width 432.8 mm (without side panel)
2	2	Side panel, St, 1.5 mm, finish Zincor; with 19" mounting bracket, powder-coated (see Order information for colour)
3a	1	Front panel, perforated, St, 1.5 mm, finish Zincor, powder-coated (see Order information for colour); two quick-release fasteners, black
3b	1	Front panel, solid, St, 1.5 mm, finish Zincor, powder-coated (see Order information for colour); two quick-release fasteners, black
4	1	Assembly kit

ORDER INFORMATION

1 U air deflector chassis for 19" fan trays	Depth mm	Colour	Part no. Front panel, perforated	Part no. Front panel, solid
for single-row fan trays (3 fans)	193	RAL 7035	10713-140	10713-146
	193	RAL 9005	10713-142	10713-148
	193	RAL 9006	10713-144	10713-150
for double-row fan trays (6 fans)	330	RAL 7035	10713-141	10713-147
	330	RAL 9005	10713-143	10713-149
	330	RAL 9006	10713-145	10713-151
Accessories				
Filter mat, class G 2 for 3 fans, PU 3 pieces				**60713-169**
Filter mat, class G 2 for 6 fans, PU 3 pieces				60713-331

AC FANS/REPLACEMENT FANS



01108005

DELIVERY COMPRISES

Item	Qty	Description
1	1	Fan (width 119 mm, depth 119 mm)

ORDER INFORMATION

Description	Height mm	Airflow volume m^3/h	115 V_{AC} Part no.	230 V_{AC} Part no.
Type A	25	84	**20713-146**	**20713-142**
Type B	25	108	**20713-147**	**20700-001**
Type C	38	162	**20713-244**	**20713-243**
Assembly kit for fan PU 1 kit				**21102-013**

DIMENSIONS AC fans

Type	Type A		Type B		Type C	
Frequency in Hz	50	60	50	60	50	60
Airflow volume in m^3/h	84	90	108	120	162	192
Noise level per fan in dB(A)	29	30	34	38	37	41
Max. static pressure in Pa	23	21	41	41	73	88
Max. ambient temperature in °C	70	70	70	70	70	70
Power consumption in W	8	7	14	11	15	14
Dimensions: height in mm (width 119 mm × depth 119 mm)	25		25		38	

- Please order connecting cable separately, see page 4.14
- Please order protective grille separately, see page 4.18

DC FANS/REPLACEMENT FANS



01108005

DELIVERY COMPRISES

Item	Qty	Description
1a	1	Fan, height 38 mm, with plug connection
1b	1	Fan, height 25.5 mm, connecting cable, length 55 mm, connector with 2 x FASTON connectors (2.8 x 0.8 mm)

ORDER INFORMATION

Height mm	Airflow volume m^3/h	Power consumption W	Input voltage V	Part no.
25.5	171	5.3	24	**20713-172**
38	184	8	12	**20713-241**
38	184	8	24	**20713-240**
38	184	8	48	20713-242
Assembly kit for fan PU 1 kit				**21102-013**

TECHNICAL DATA DC fans

Voltage in VDC	24	12	24	48
Dimensions: height in mm (width 119 mm × depth 119 mm)	25	38	38	38
Airflow volume in m^3/h	171	184	184	184
Noise level per fan in dB(A)	41.5	42	42	42
Max. stat. pressure in Pa	50.5	68	68	68
Max. ambient temperature in °C	70	70	70	70
Power consumption in W	7	8	8	8

- Please order connecting cable for 38 mm high fans separately, see page 4.14
- Please order protective grille separately, see page 4.18

Part number in bold face type: ready for shipping within 2 working days
Part number in normal type: ready for shipping within 10 working days

PROTECTIVE GRILLE TO SNAP-IN

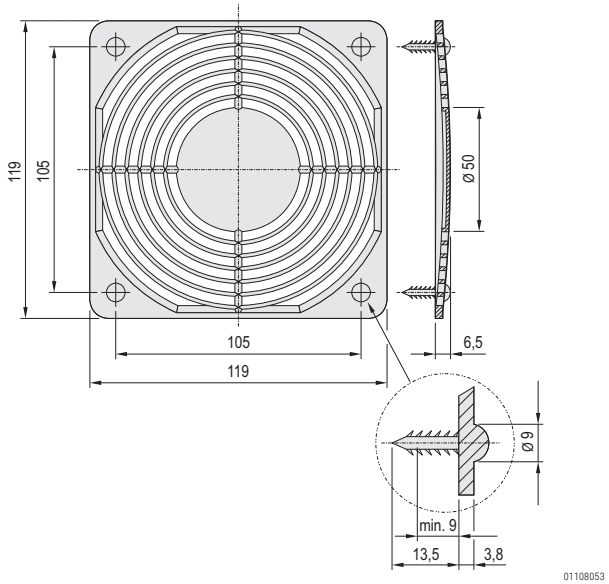

- Protective grille for direct mounting on AC and DC fans

DELIVERY COMPRISES

Item	Qty	Description
1	1	Fibre glass reinforced plastic (PA), black, in accordance with DIN 31001, UL 94 V-0

ORDER INFORMATION

Description	Part no.
Protective grille, plastic, to snap-in	**60225-052**

PROTECTIVE GRILLE, PLASTIC, TO SCREW-ON

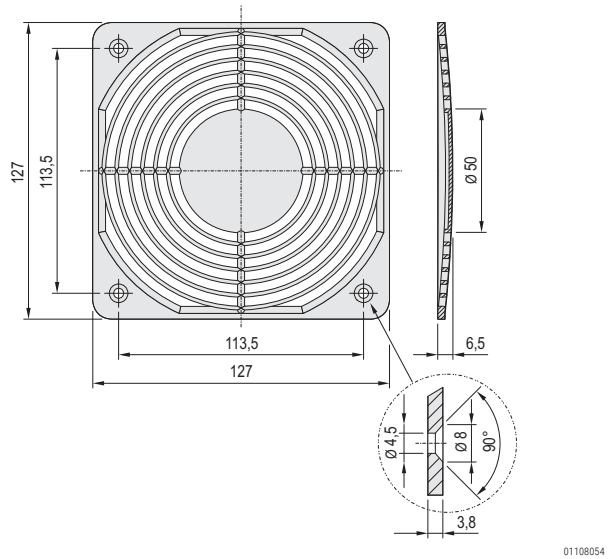

- Protective grille for AC and DC fans
- Grille may be mounted on a front panel or the wall of the housing

DELIVERY COMPRISES

Item	Qty	Description
1	1	Fibre glass reinforced plastic (PA), black, in accordance with DIN 31001, UL 94 V-0

ORDER INFORMATION

Description	Part no.
Protective grille, plastic, to screw-on	**60225-053**
Assembly kit for plastic grille (4 screws, 4 washers, 4 nuts M4), PU 1 set	**21102-014**

PROTECTIVE GRILLE, METAL, TO SCREW-ON

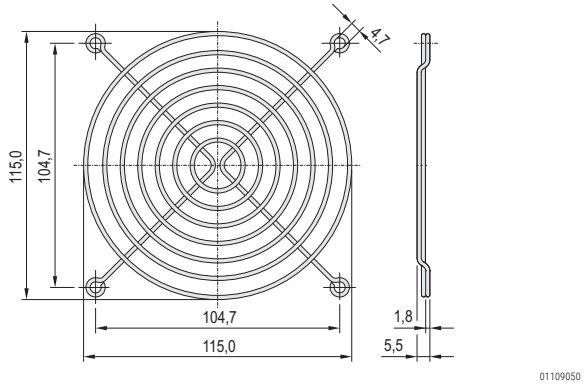

- Protective grille for direct mounting on AC and DC fans
- Optimised noise level and air resistance

DELIVERY COMPRISES

Item	Qty	Description
1	1	St, 1 mm

ORDER INFORMATION

Description	Part no.
Protective grille, metal, to screw-on	**60197-019**
Assembly kit for metal grille (4 screws, 4 washers, 4 nuts M4), PU 1 set	**21102-015**

Climate control – 19" fan trays

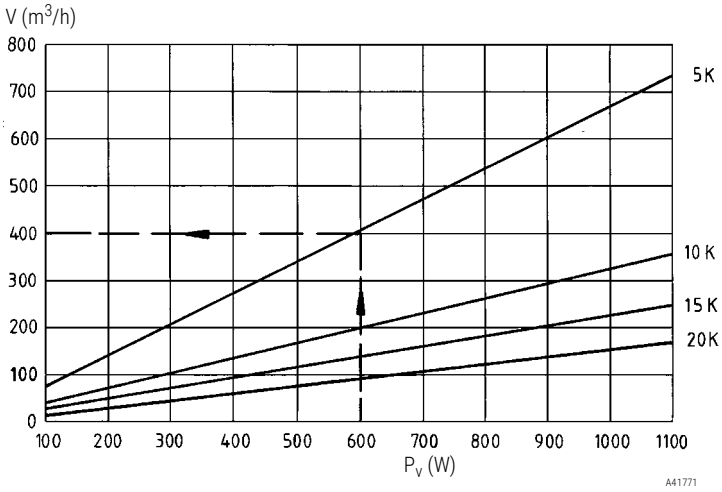

For local heat dissipation, the airflow volume required to expel the heat produced is calculated.

Note
The cabinet ventilation is not taken into account here.
The required airflow volume is calculated as follows:

$V = (f \times P_V)/\Delta T$

The air constant f = 3.3 m^3K/Wh.
ΔT is the temperature difference between the ambient temperature of the sub-assembly and that of the air drawn in.

Example of readings
- Pv = 600 W
- air sucked in: 25 °C
- permissible ambient temperature of the sub-assembly = 30 °C

1. $\Delta T = T_i - T_u$ = 30 °C – 25 °C = 5 K
2. From P_V = 600 W to the curve for ΔT =5 K
3. From the intersection point to the airflow volume V = 400 m^3/h

Part number in bold face type: ready for shipping within 2 working days
Part number in normal type: ready for shipping within 10 working days

Climate control – Service

PRODUCTS / COOLING CONCEPTS

Product	Closed cabinet	Raised cover, ventilation slots	Perforated doors	19" circulation fan, top cover fan
	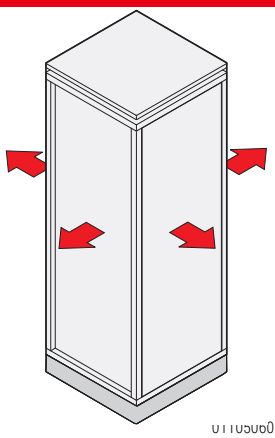	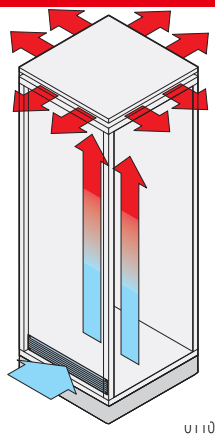	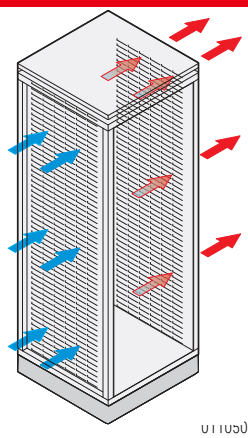	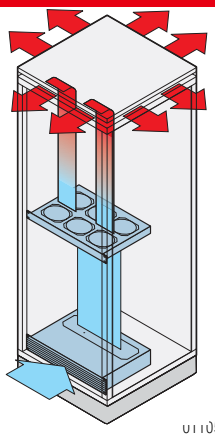
Description	Natural convection through thermal radiation	Free convection through top opening	Free convection through openings in doors/rear panels	Cooling with air
Type of protection	≤ IP 55	≤ IP 20	≤ IP 20	≤ IP 20
Noise level approx.	0	0	55 ... 65 dB(A)	34 ... 67 dB(A)
Environmental conditions	$T_i > T_a$	$T_i > T_a$	$T_i > T_a$	$T_i > T_a$
Cooling capacity approx. [1]	< 500 W	500 W ... 800 W	500 W ... 6000 W [2]	< 2000 W

1) depending on cabinet size, electronic components, location and room cooling concept
2) > 800 W are only possible with own, active cooling through components like servers, etc.
T_i = cabinet inner temperature T_a = cabinet ambient temperature

THERMAL SIMULATION

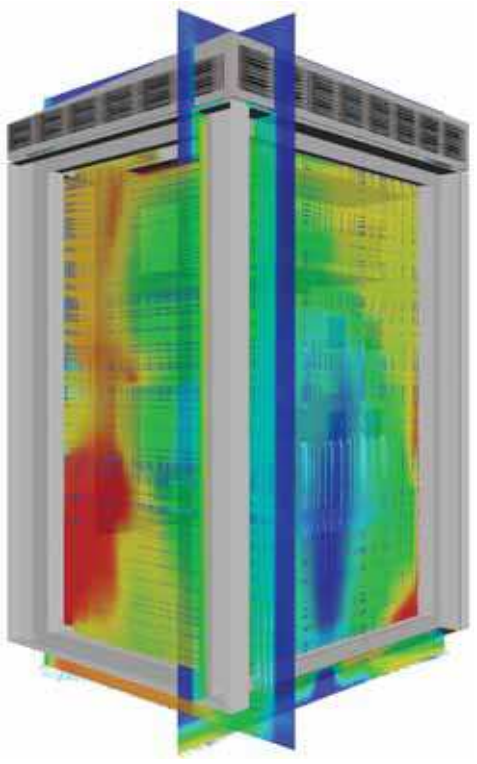

01103050

Project support through state-of-the-art simulation technology
As the packing density and integration density of components increases, the transport of waste heat rapidly becomes more difficult. Analyzing heat transport through thermal paste, flow and heat radiation makes it possible to identify hot spots as early as the design phase. We use state-of-the-art numerical analyses and simulation methods to accomplish this. This allows the analysis and optimization of cooling concepts for anything from an assembly to an entire cabinet system at the preliminary stage. Our cooling specialists would be happy to assist you in finding the right cooling concept for your project

Your advantage:

- Analyzing in detail to eliminate thermal problems at the preliminary stage
- Ensuring the high efficiency and reliability of your systems
- Reducing the number of expensive prototypes and tests
- Reducing expenses and development costs

Climate control – Service

PRODUCTS/COOLING CONCEPTS

Product	Air filtered fans	Air conditioners	Air/water heat exchanger (LHX 3)	Air/water heat exchanger (LHX 20/40)
	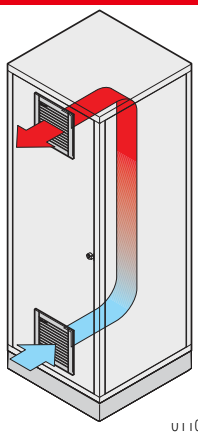	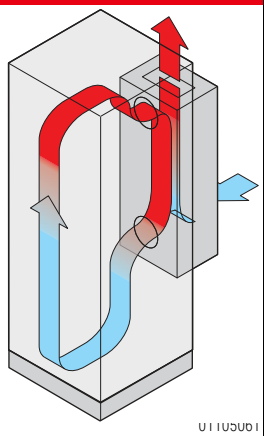	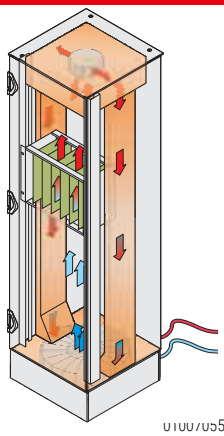	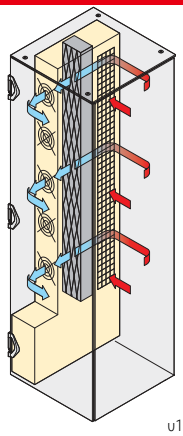
Description	Cooling with air	Cooling with coolant	Cooling with water	Cooling with water
Type of protection	≤ IP 55	≥ IP 55	≥ IP 55	≥ IP 55
Noise level	39 ... 71 dB(A)	60 ... 81 dB(A)	45.2 dB(A)	50 ... 70 dB(A)
Environmental conditions	$T_i > T_a$	$T_a \leq 55$ °C	$T_a \leq 70$ °C	$T_a \leq 70$ °C
Cooling capacity approx. 1)	< 1500 W	< 17000 W	< 3000 W	< 40000 W

1) depending on cabinet size, electronic components, location and room cooling concept
T_i = cabinet inner temperature T_a = cabinet ambient temperature

OPTIMAL TEST EQUIPMENT



01112001

Climate bay testing

Being part of the Pentair group, Schroff and McLean look back on 50 years of experience and are reknown around the world for their expertise in efficient cooling of industrial facilities and equipment.

Based on our own laboratory test chambers with the most modern equipement in Europe, America and Asia:

- Walk-in climate chamber to test and optimize completely integrated cabinets and systems under different conditions
- Smaller climate chambers to test components
- Airflow and air resistance measurements in a wind tunnel
- Noise level measurements
- Tests in accordance with DIN EN 60529 to determine the type of protection (IP)

Outstanding standard products, flexible custom solutions, global technical support and service add up to a 'cool' combination!

Part number in bold face type: ready for despatch within 2 working days
Part number in normal type: ready for despatch within 10 working days

North America

Warwick, RI, USA
Tel +1.401.738.1722
San Diego, CA, USA
Tel +1.858.740.2400

Europe, Middle East & India

Straubenhardt, Germany
Tel +49 7082 794 0
Betschdorf, France
Tel +33 3 88 90 64 90
Warsaw, Poland
Tel +48 22 209 98 35
Hemel Hempstead,
Great Britain
Tel +44 1442 24 04 71
Lainate, Italy
Tel +39 02 932 714 1
Dubai, United Arab Emirates
Tel +971 4 82 38 666
Bangalore, India
Tel +91 80 6715 8900
Istanbul, Turkey
Tel +90 541 368 0941

Asia Pacific

Shanghai, China
Tel +86 21 2412 6943
Singapore
Tel +65 6768 5800
Shin-Yokohama, Japan
Tel +81 45 476 0271

Our powerful portfolio of brands:

CADDY ERICO HOFFMAN RAYCHEM SCHROFF TRACER

nVent

nVent.com/SCHROFF

©2018 nVent. All nVent marks and logos are owned or licensed by nVent Services GmbH or its affiliates. All other trademarks are the property of their respective owners.
nVent reserves the right to change specifications without notice.