Base

PARTS LIST			
ITEM	QTY	PART NUMBER	DESCRIPTION
3	1	M5403016	Unicase Assembly Kit
4	2	M5400003	Extrusion
5	1	M5401004	Top Cover
6	1	M5401116	Base Panel
7	2	M5402002	Front/Rear Panels

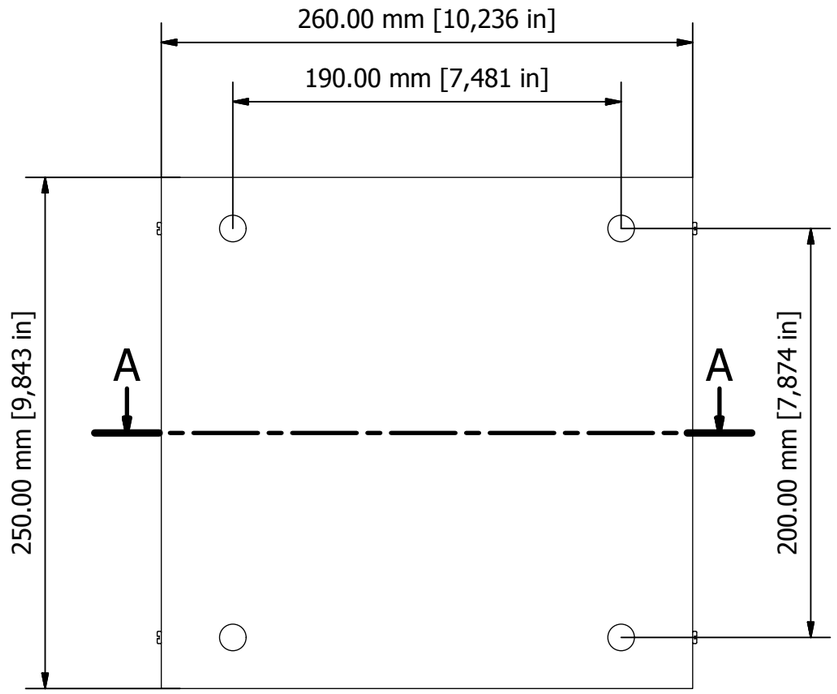

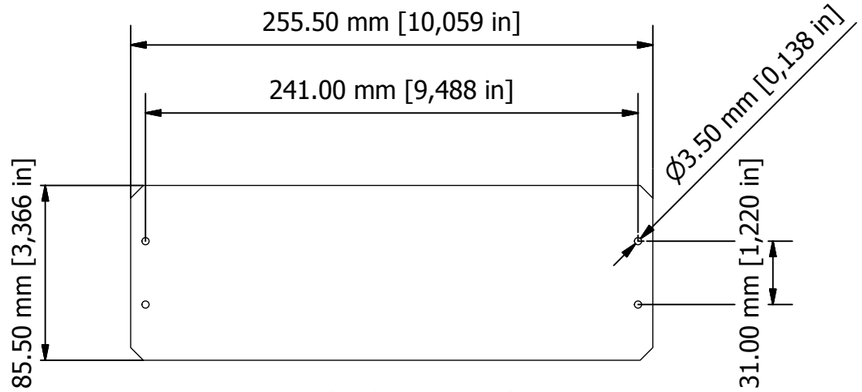

Anodised Front Panel
2 off - 2mm Thick.

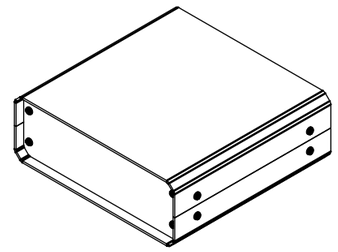

Front

A-A

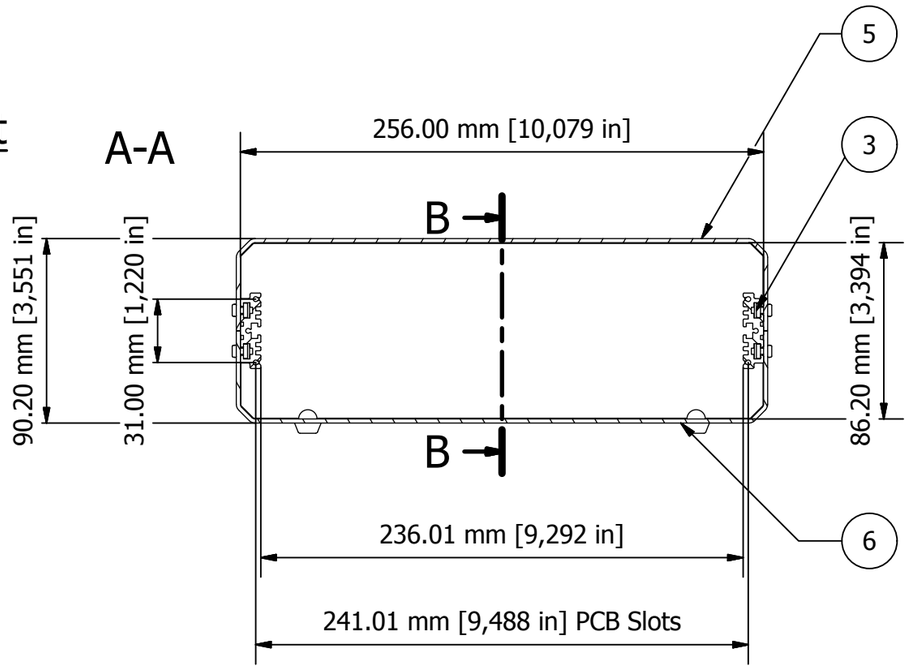

Side

B-B

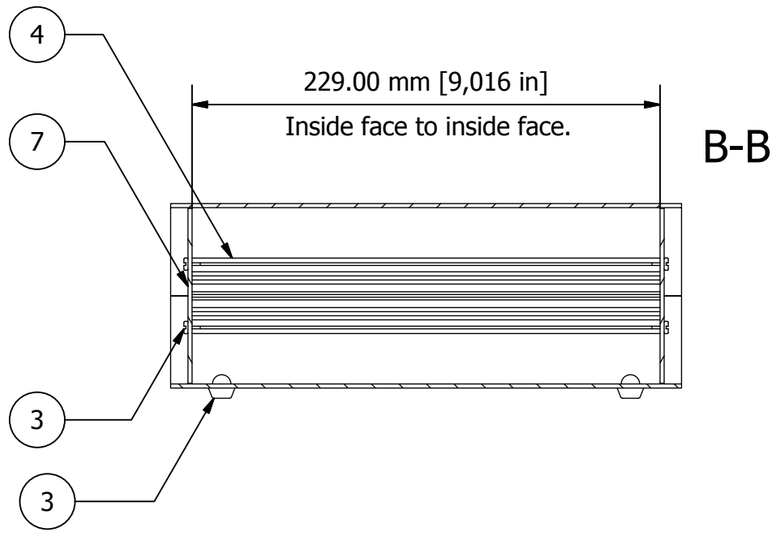

FIRST ANGLE PROJECTION

Designed by	Description	Date	Scale
L Clark	UNICASE 2 LIGHT GREY	26/05/2015	1:3

METCASE ENCLOSURES
15 Brunel Way, Segensworth East, Fareham,
Hampshire, UK. PO15 5TX
Tel: +44 (0)1489 583858 Email: metcase@okw.co.uk

METCASE www.metcase.com

Part Number	Issue	Sheet
M5502110	1	1 / 1

© OKW Enclosures Ltd (Date as shown). This drawing contains proprietary information of OKW Enclosures Ltd and is tendered subject to the following conditions. The information be retained in confidence, not be reproduced or copied, and not be used or incorporated in any product, unless permission is obtained in writing from OKW Enclosures Ltd.