Type number key

VFD 007 EL 43 A

- A: Version number — A=standard
- 43: Input voltage — 21=230VAC 1ϕ 23=230VAC 3ϕ 43=400VAC
- EL: VFD-EL: series
- 007: Power — 007=0.75kW 022=2.2kW etc
- VFD: Delta **V**ariable **F**requency **D**rive



230V single phase 0.2 ~ 2.2kW

Type number	VFD□□□□□□	002EL21A	004EL21A	007EL21A	015EL21A	022EL21A
Rated power	kW	0.2	0.4	0.75	1.5	2.2
Rated output current	A RMS	1.6	2.5	4.2	7.5	11
Current limit	%	150% 60s				
Rated output capacity	kVA	0.6	1	1.6	2.9	4.2
Rated input current	A RMS	4.9	6.5	9.7	15.7	24
Mains fuse (for UL: Bussmann)		JJN-10	JJN-15	JJN-20	JJN-30	JJN-50
Dimensions HxWxD	mm	174x72x136			174x100x136	
Size ****		A			B	
Weight	kg	1.1			1.9	
Section of power cables	mm^2	0.8 ~ 3			0.8 ~ 8	
Cooling		Convection		Fan		
Carrier frequency	kHz	2 ~ 12				
EMC-Filter		Built-in				
DC-Choke		No				
DC-Bus connection		Yes				
Brake chopper		No				
Recommended brake resistor	Ω/W	200/80 **			110/300 **	110/300 ***
Minimum brake resistor value	Ω	105.6 **				

** With external BUE20015 brake chopper
*** With external BUE20037 brake chopper
**** See dimensional drawing on Page 2.

DELTA ELECTRONICS, INC.
ALL RIGHTS RESERVED

Delta reserves the right to make changes without prior notice

400V 0.4 ~ 3.7kW

Type number	VFD□□□□□□□	004EL43A	007EL43A	015EL43A	022EL43A	037EL43A
Rated power	kW	0.4	0.75	1.5	2.2	3.7
Rated output current	A RMS	1.5	2.5	4.2	5.5	8.2
Current limit	%	150% 60s				
Rated output capacity	kVA	1.2	2	3.3	4.4	6.8
Rated input current	A RMS	1.9	3.2	4.3	7.1	11.2
Mains fuse (for UL: Bussmann)		JJS-6	JJS-6	JJS-10	JJS-15	JJS-20
Dimensions HxWxD	mm	174x72x136			174x100x136	
Size ****		A			B	
Weight	kg	1.2			1.9	
Section of power cables	mm^2	0.8 ~ 3			0.8 ~ 8	
Cooling		Convection		Fan		
Carrier frequency	kHz	2 ~ 12				
EMC-Filter		Built-in				
DC-Choke		No				
DC-Bus connection		Yes				
Brake chopper		No				
Recommended brake resistor	Ω/W	750/80 **		360/200 **	250/300 ***	140/600 ***
Minimum brake resistor value	Ω	422 **		95 **	84.4 ***	

** With external BUE40015 brake chopper
*** With external BUE40037 brake chopper

**** See dimensional drawing below.

Sizes and dimensions in mm [inches]

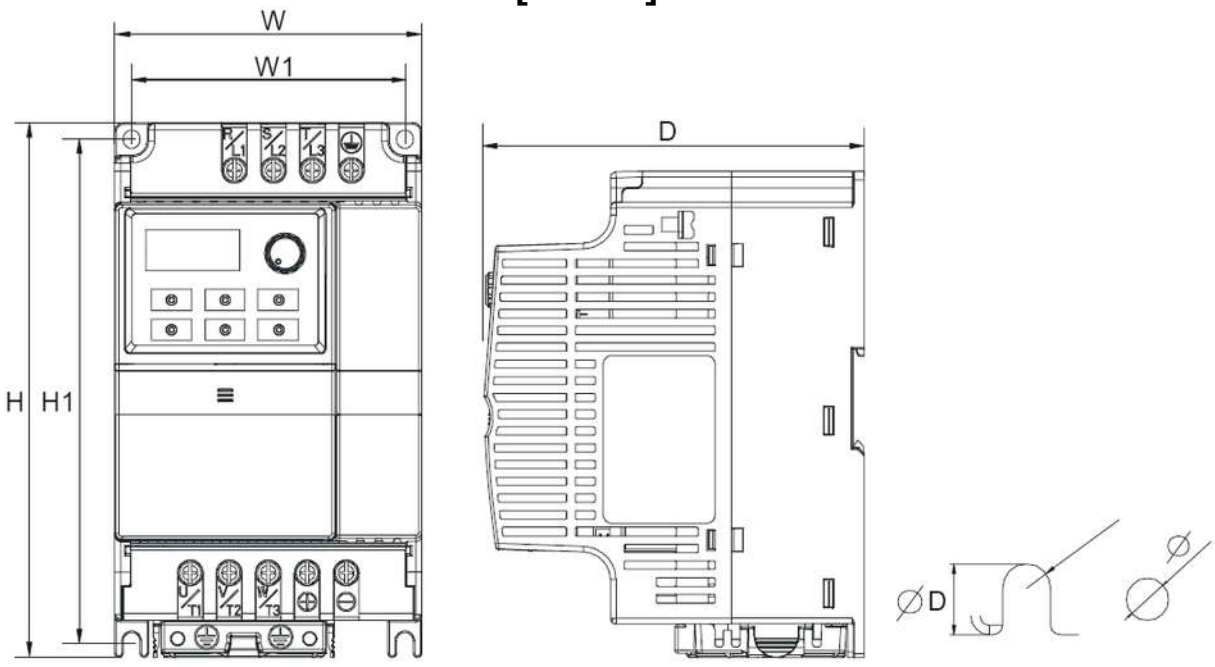

Frame	W	W1	H	H1	D	Ø	ØD
A	72.0[2.83]	59.0[2.32]	174.0[6.86]	151.6[5.97[	136.0[5.36]	5.4[0.21]	2.7[0.11]
B	100.0[3.94]	89.0[3.50]	174.0[6.86]	162.9[6.42]	136.0[5.36]	5.4[0.21]	2.7[0.11]

Common data VFD-EL

Mains voltage range	V	200V: 180 ~ 264 400V: 342 ~ 528
Mains frequency	Hz	47 ~ 63
Output frequency range	Hz	0 ~ 599
Output voltage range	V	0 ~ Mains
Operating temperature	°C	-10 ~ +50 *
Storage temperature	°C	-20 ~ +60
Atmospheric pressure	kPa	86 ~ 106
Relative humidity	%	≤90 (non condensing)
Vibration		<20Hz: 1G / 20~50Hz: 0.6G
Degree of protection		IP20
Pollution degree		2
Altitude	m	≤1000
Keypad		Standard
Max. Signal cable section	mm^2	0.2 ~ 1.3 **
Digital inputs	6x MIx	SINK or SOURCE: Via jumper Range: 24VDC Debounce time: 2~40ms Pull-up (internal): 3.6kΩ (ca. 6mA)
Analogue inputs		Accuracy: 10 bits
	1x AVI	Range: 0~10VDC or 4~20mA Impedance: 47kΩ 250Ω
Digital outputs	1x MOx	Optocoupler OC: 48VDC/50mA
Analogue outputs	1x AFM	Accuracy: 8 bits Range: 0~10VDC/2mA (square wave) Impedance: 47Ω
Relays	1x	Change-over NO: R_A~R_C: Resistive 5A/240VAC-24VDC Inductive 1.5A/240VAC-24VDC NC: R_B~R_C: Resistive 3A/240VAC-24VDC Inductive 0.5A/240VAC-24VDC
Signal supply	1x	+24VDC/50mA
Potentiometer supply	1x	+10VDC/3mA
Trip memory		Last 5 errors
Acc/Dec Times	s	0.01 ~ 600s
Serial communication	1x RJ45	Modbus RS485 Baudrate: 4800 ~ 38400 Address: 1 ~ 254 Mode ASCII: 7,N,1 /7,N,2 / 7,E,1 / 7,E,2 / 7,O,1 / 7,O,2 Modbus RTU: 8,N,2 / 8,N,2 / 8,E,1/ 8,E,2 / 8,O,1 / 8,O,2

* Side-by-side mounting –10 ~ +40°C
** For standard relay 0.2 ~ $3mm^2$
*** Select via switch ACI/AVI

Power terminals (general)

Terminal symbol	Terminal function
R/L1, S/L2, T/L3	Mains input
U/T1, V/T2, W/T3	Motor output
+ -	DC-bus connection for brake unit
⏚	Ground

Basic wiring diagram

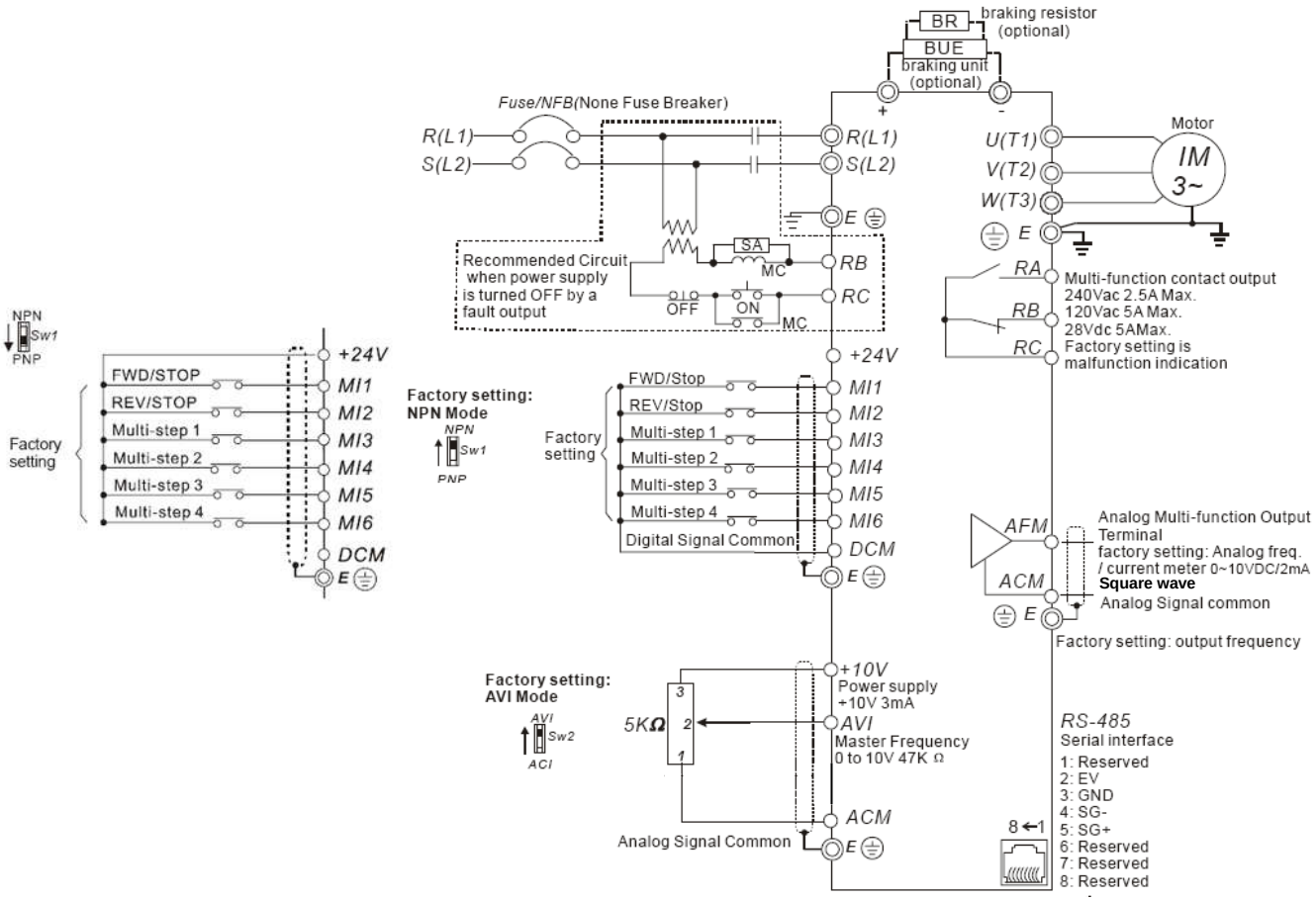

Options

Filters Built-in option:
230V 1-phase: 1st Environment Class C1, motor cable ≤1m, carrier frequency ≤8kHz
1st Environment Class C2, motor cable ≤5m, carrier frequency ≤8kHz
400V: 2nd Environment Class C3, motor cable ≤15m, carrier frequency ≤8kHz

Braking Brake resistors and Brake units.

Keypad&Cables PU06 Copy Keypad.

Mounting DIN-rail and Earthing plate.

Communication USB converter, Communication converters, Splitters, Cables.

Fieldbus Option modules: Devicenet, Profibus, LonWorks, CANopen.

Software To read, save, copy, change parameters, download VFDSoft.
It can be downloaded from www.delta-emea.com.

Programming

Group 00-xx **User Parameters**
Drive ID, Software version, Password, Parameter reset, User-defined display, etc.

Group 01-xx **Basic Parameters**
V/f-curve, Acc/Dec times, Jogging, S-curve, etc.

Group 02-xx **Operation Method Parameters**
Source of frequency/operation, Carrier frequency, 2-3 Wire operation, Motor direction inhibit, Stop method, etc.

Group 03-xx **Output Function Parameters**
Function and setting of analogue and digital outputs and relay, Count values, Fan control, Brake control, etc.

Group 04-xx **Input Function Parameters**
Function and setting of analogue and digital inputs, Index function, Debounce time, Digital input status, etc.

Group 05-xx **Multi-step Speed Parameters**
15 Speed steps.

Group 06-xx **Protection Parameters**
Protection settings, Fault memory, etc.

Group 07-xx **Motor Parameters**
Setting of motor parameters, Slip&Torque Compensation, PTC-function.

Group 08-xx **Special Parameters**
DC-Braking, 3 Skip frequencies, Speed search, AVR, Auto energy saving, Auto reset, etc.

Group 09-xx **Communication Parameters**
Protocol, Address, Transmission speed, etc.

Group 10-xx **PID Control Parameters**
PID settings, Sleep and Wake-up, Multi-pump function, etc.

www.delta-emea.com