30809-638 HF FRAME TYPE PLUG-IN UNIT REAR PANEL, WITHOUT CUT-OUT, 3 U, 14 HP

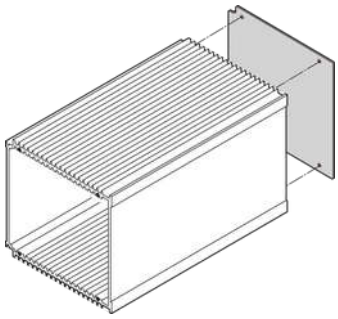

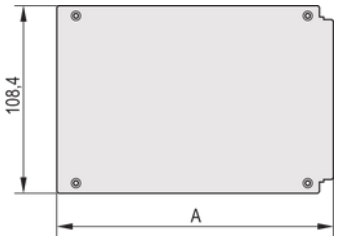

KEY FEATURES

Rear Panel for HF frame type plug-in unit, without cut-out

Rear Panel for HF plug-in units can be modified with Front Panel Configurator

PRODUCT ATTRIBUTES

Product Type: Side Panel

Type: Rear Panel

Rack Width: 14 HP

Package Quantity: 5

ADDITIONAL PRODUCT DETAILS

Rear Panel for HF frame type plug-in unit, without cut-out enable a user to created their one cut out.

Rear Panel for HF plug-in units can be modified with Front Panel Configurator.

Please take into consideration that deliveries may be carried out in the stated SPQs (SPQ, e.g. 5 pieces, 10 pieces, 50 pieces, etc.). Differing order quantities (e.g. 2 pieces) may be changed to the next possible delivery quantity = Standard Pack Quantity.

CERTIFICATIONS



North America
All locations
+1.763.422.2661
Chat with us:
schroff.nvent.com

Europe
Straubenhardt, Germany
+49.7082.794.0
Betschdorf, France
+33.3.88.90.64.90
Warsaw, Poland
+48.22.209.98.35
Assago, Italy
+39.02.932.7141
Chat with us:
schroff.nvent.com

Asia
Shanghai, China
+86.21.2412.6943
Qingdao, China
+86.532.8771.6101
Singapore
+65.6768.5800
Shin-Yokohama, Japan
+81.45.476.0271
Chat with us:
schroff.nvent.com

Middle East & India
Dubai, United Arab Emirates
+971.4.378.1700
Bangalore, India
+91.80.6715.2001
Istanbul, Turkey
+90.216.250.7374
Chat with us:
schroff.nvent.com



Our powerful portfolio of brands:
nVent.com **CADDY ERICO HOFFMAN RAYCHEM SCHROFF TRACER**

© 2024 nVent. All nVent marks and logos are owned or licensed by nVent Services GmbH or its affiliates. All other trademarks are the property of their respective owners.

nVent reserves the right to change specifications without notice.