Brand of NTN corporation

Technical data

UCFE211-32

Bearing units



Grey cast housing, radial insert ball bearing with socket set screws,seal with slinger

KIT CONTENT

UC211-32G2, FE211

VISUAL (S)

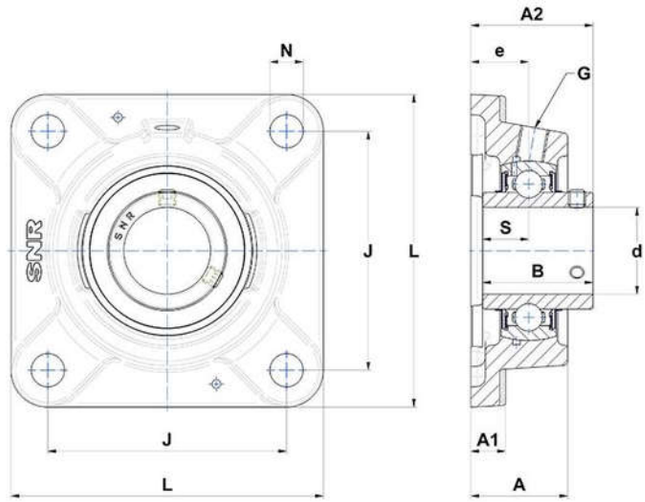

PRODUCT DEFINITION

Brand	SNR
A - Housing height	48,5 mm
A1 - Housing foot height / flange height	15 mm
A2 - Total height from mounting surface	64,4 mm
B - Width of Inner Ring	55,6 mm
d - Shaft diameter	50,8 mm

PRODUCT DEFINITION	
e - Distance mounting surface to bearing center	31 mm
G - Grease fitting	R1/8"
J - Mounting holes distance	130 mm
L - Housing width / diameter	162 mm
N - Mounting hole dimension	18 mm
S - Distance front side/bearing centre	22,2 mm

PRODUCT PERFORMANCE	
C - Dynamic load rating	43550000 mN
C0 - Static load rating	29200000 mN
Operating temperature min.	253,15 °K
Operating temperature max.	373,15 °K

OTHER FEATURES	
Mass	3,81 kg
Recommended tightening torque for set screw	16.8 N-m