

Unlock button, blue

Part no. M22-DZ-B
Article no. 254833
Catalog No. M22-DZ-BQ

Delivery programme

Basic function accessories			Pushbuttons
Single unit/Complete unit			Single unit
			For enclosed overload relays Mounting diameter: 22.3 mm
For use with			ZW7… ZE Z5 ZB12 ZB32 ZB65 ZB150
Colour			
			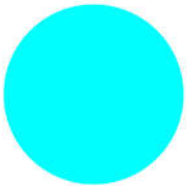
Connection to SmartWire-DT			no
Button plate			Blue

Approvals

Product Standards	UL 508; CSA-C22.2 No. 14; IEC/EN 60947; CE marking
UL File No.	E29184
UL Category Control No.	NKCR
CSA File No.	012528
CSA Class No.	3211-03
North America Certification	UL listed, CSA certified
Specially designed for North America	No

Technical data ETIM 5.0

Low-voltage industrial components (EG000017) / Front element for push button (EC000221)
Electric engineering, automation, process control engineering / Low-voltage switch technology / Command and alarm device / Front element for push-button actuators (ecl@ss8-27-37-12-10 [AKF028010])

Colour button			Blue
Number of command positions			1
Construction type lens			Round
Hole diameter		mm	22
Width opening		mm	22
Height meter opening		mm	6
Degree of protection (IP), front side			IP67
Type of button			Flat
Suitable for illumination			No
Switching function latching			No
Spring-return			Yes
With front ring			Yes
Material front ring			Plastic
Colour front ring			Chrome

Dimensions

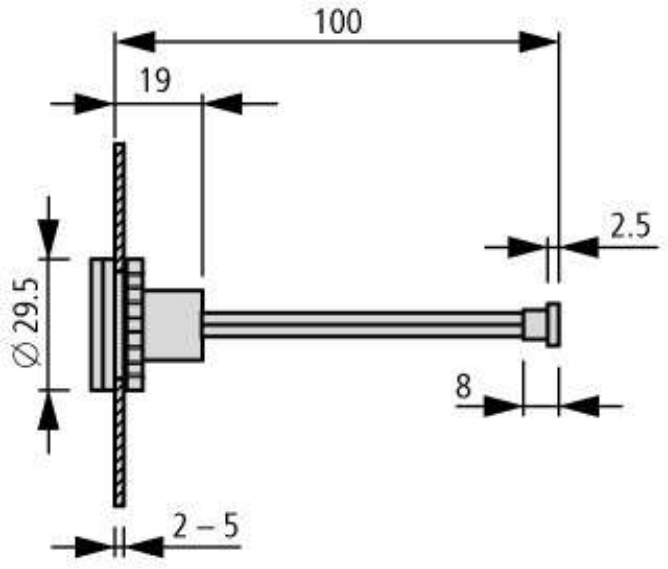

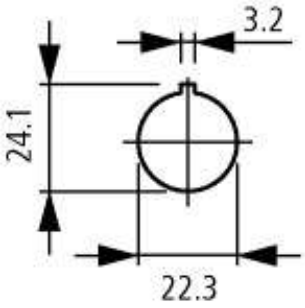

Additional product information (links)

IL04716002Z (AWA1160-1745) RMQ-Titan System	
IL04716002Z (AWA1160-1745) RMQ-Titan System	ftp://ftp.moeller.net/DOCUMENTATION/AWA_INSTRUCTIONS/IL04716002Z2013_08.pdf

© 11/2013 by Eaton Industries GmbH