# OG5128

## Through-beam sensor receiver

OGE-DPKG/US/90°

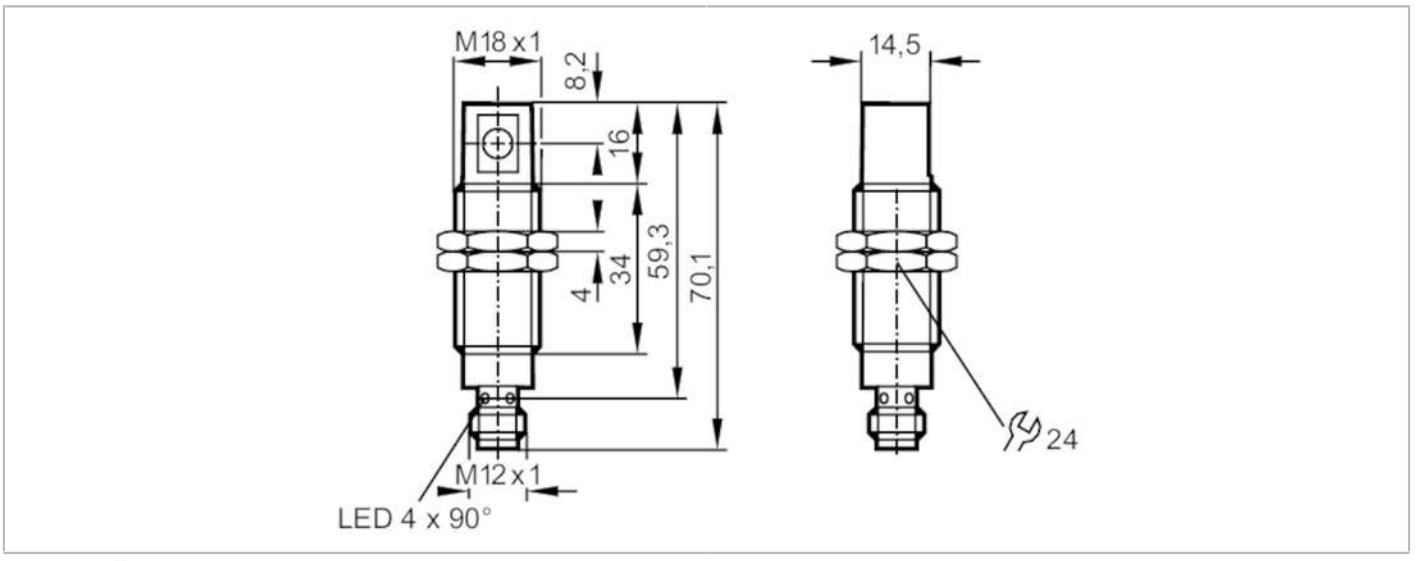


| | | |
|---|---|---|
| **Product characteristics** | | |
| Type of light | | red light |
| Housing | | threaded type |
| **Application** | | |
| Function principle | | Through-beam sensor |
| **Electrical data** | | |
| Operating voltage | [V] | 10...30 DC;  ("supply class 2" to cULus) |
| Current consumption | [mA] | < 12 |
| Protection class | | II |
| Reverse polarity protection | | yes |
| Type of light | | red light |
| Wave length | [nm] | 660 |
| **Outputs** | | |
| Electrical design | | PNP |
| Output function | | dark-on mode |
| Max. voltage drop switching output DC | [V] | 2.5 |
| Permanent current rating of switching output DC | [mA] | 200 |
| Switching frequency DC | [Hz] | 500 |
| Short-circuit protection | | yes |
| Type of short-circuit protection | | pulsed |
| Overload protection | | yes |
| **Detection zone** | | |
| Transmitter / receiver | | receiver |
| Range | [m] | < 9 |
| Range adjustable | | no |

# OG5128

## Through-beam sensor receiver

OGE-DPKG/US/90°

| | | | |
|---|---|---|---|
| **Operating conditions** | | | |
| Ambient temperature | [°C] | -25...60 | |
| Protection | | IP 68 | |
| **Tests / approvals** | | | |
| EMC | | EN 60947-5-2 | |
| | | EN 55011 | class B |
| MTTF | [years] | 953 | |
| **Mechanical data** | | | |
| Weight | [g] | 58.4 | |
| Housing | | threaded type | |
| Dimensions | [mm] | M18 x 1 / L = 59.3 | |
| Thread designation | | M18 x 1 | |
| Materials | | stainless steel; ABS | |
| Lens material | | PMMA | |
| **Displays / operating elements** | | | |
| Display | | switching status | 1 x LED, yellow |
| | | operation | 1 x LED, green |
| **Accessories** | | | |
| Items supplied | | Nuts: 2 | |
| | | lock washers: 2 | |
| **Remarks** | | | |
| Pack quantity | | 1 pcs. | |
| **Electrical connection** | | | |

Connector: 1 x M12; coding: A




Connection

