PRODUCT DETAILS

ARTICLE: 12254G

WHEEL BG 80X25/40 RB SWIVEL FORK M22



Wheel series BG

Wheels with elastic grey rubber ring on welded steel discs with ball bearings, roller bearings or nylon friction bearings.
Wheel fitted with standard roller bearing.

Castor series M22

M22 series, Medium-light pressed steel fork assemblies; swivel version has double ball raceways. Zincplated.

Technical data

Wheel diameter	D	80 mm
Tyre width	E	25,0 mm
Bore diameter	d	12 mm
Weight article		0,700 kg
Hub width	L	40 mm
Overall height	H	106 mm
Top plate outer dimensions	AxB	102x83 mm
Bolt hole spacing	axb	76x55 mm
Bolt hole spacing	axb	80x60 mm
Fixing bolt diameter	g	M8
Offset	F	33 mm
Fork width	U	40 mm
Load Capacity		70 kg

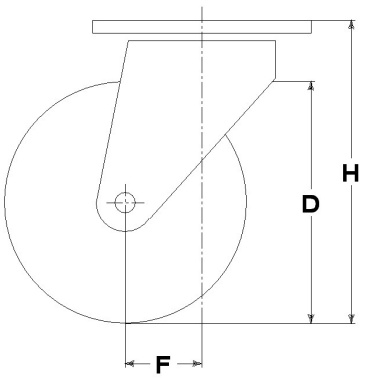

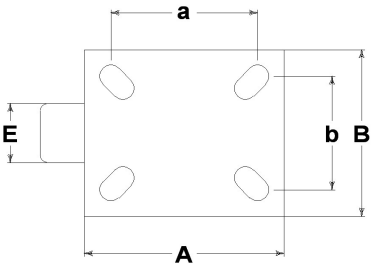

Related Articles

Spare part wheel: 12054G
Version with trailing brake: 12254GFR

GENERAL INFORMATION / RECOMMENDATIONS AND WARNINGS
The cited text and the complete catalogue in their most up-dated versions are available in the OEM's website page www.lagspa.it/downloads. The dimensions, descriptions, specifications and illustrations herein are indicative and subject to variations without notice. The fact that products are illustrated herein does not necessarily imply they are available from stock nor does it place us under any obligation to supply them.
Tests carried out refer to the original products with original accessories: the replacement of one of the components with others of different manufacture might prevent the same results from being achieved and will automatically invalidate any guarantee. Please contact our technical service concerning any special application.