SSG

Subminiature Basic Switch

Global Subminiature Basic Switch Conforming to EN61058-1

- **A wide operating temperature range of –25°C to 125°C is available for at high-temperature use.**
- **PCB terminal models are resistant to flux.**
- **Even-pitched PCB terminals.**
- **Mounting hole size of M2.2.**



Model Number Legend

SSG-[1][2][3][4][5]

1. Ratings
- 5 : 5 A at 125 VAC
- 01 : 0.1 A at 125 VAC

2. Actuator
- None : Pin plunger
- L1 : Hinge lever
- L2 : Hinge roller lever
- L3 : Simulated roller lever

3. Contact Form
- None : SPDT
- -2 : SPST-NC
- -3 : SPST-NO

4. Terminals
- H : Solder terminals
- T : Quick-connect terminals (#110)
- P : PCB terminals (SPDT only)

5. Maximum Operating Force
- None : 1.5 N {153 gf}
- -5 : 0.5 N {51 gf}

Note. These values are for the pin plunger models.

Separator (Sold Separately), Terminal Connector (Sold Separately) ➡ Refer to "**Basic Switch Common Accessories**"

List of Models

Actuator	Terminals	Ratings Maximum Operating Force (OF)	5 A	0.1 A
Pin plunger 	Solder terminals	1.50 N {153 gf}	SSG-5H	SSG-01H
	Quick-connect terminals (#110)		SSG-5T	SSG-01T
	PCB terminals		SSG-5P	SSG-01P
	Solder terminals	0.50 N {51 gf}	SSG-5H-5	SSG-01H-5
	Quick-connect terminals (#110)		SSG-5T-5	SSG-01T-5
	PCB terminals		SSG-5P-5	SSG-01P-5
Hinge lever 	Solder terminals	0.60 N {61 gf}	SSG-5L1H	SSG-01L1H
	Quick-connect terminals (#110)		SSG-5L1T	SSG-01L1T
	PCB terminals		SSG-5L1P	SSG-01L1P
	Solder terminals	0.20 N {20 gf}	SSG-5L1H-5	SSG-01L1H-5
	Quick-connect terminals (#110)		SSG-5L1T-5	SSG-01L1T-5
	PCB terminals		SSG-5L1P-5	SSG-01L1P-5
Simulated roller lever 	Solder terminals	0.60 N {61 gf}	SSG-5L3H	SSG-01L3H
	Quick-connect terminals (#110)		SSG-5L3T	SSG-01L3T
	PCB terminals		SSG-5L3P	SSG-01L3P
	Solder terminals	0.20 N {20 gf}	SSG-5L3H-5	SSG-01L3H-5
	Quick-connect terminals (#110)		SSG-5L3T-5	SSG-01L3T-5
	PCB terminals		SSG-5L3P-5	SSG-01L3P-5
Hinge roller lever 	Solder terminals	0.60 N {61 gf}	SSG-5L2H	SSG-01L2H
	Quick-connect terminals (#110)		SSG-5L2T	SSG-01L2T
	PCB terminals		SSG-5L2P	SSG-01L2P
	Solder terminals	0.20 N {20 gf}	SSG-5L2H-5	SSG-01L2H-5
	Quick-connect terminals (#110)		SSG-5L2T-5	SSG-01L2T-5
	PCB terminals		SSG-5L2P-5	SSG-01L2P-5

Note: Consult your OMRON sales representative for details on SPST-NO and SPST-NC models.

Contact Form

●SPDT

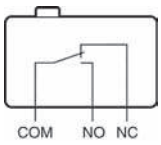

●SPST-NC

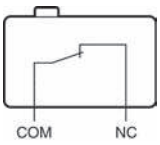

●SPST-NO

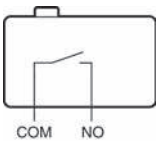

Contact Specifications

Item		SSG-5	SSG-01H.T	SSG-01P
Contact	Specification	Rivet	Crossbar	
	Material	Silver	Gold alloy	
	Gap (standard value)	0.5 mm	0.25 mm	0.5 mm
Inrush current	NC	20 A max.	1 A max.	
	NO	10 A max.	1 A max.	
Minimum applicable load (see note)		160 mA at 5 VDC	1 mA at 5 VDC	

Note: For more information on the minimum applicable load, refer to *Using Micro Loads* on page 7.

Separator (Sold Separately), Terminal Connector (Sold Separately) ➡ Refer to "**Basic Switch Common Accessories**"

Ratings

Models	Item Rated voltage	Resistive load
SSG-5	125 VAC	5 A
	250 VAC	3 A
SSG-01	125 VAC	0.1 A
	30 VDC	0.1 A

Note: 1. The above current ratings are the values of the steady-state current.
2. If the Switch is used in a DC circuit and is subjected to a surge current, connect a surge suppressor across the switch.
3. The ratings values apply under the following test conditions:
Ambient temperature: 20±2°C
Ambient humidity: 65±5%
Operating frequency: 30 operations/min

Approved Standards

EN61058-1 (File No. J9451449, TÜV Rheinland approval)

Rated voltage	SSG-5	SSG-01
250 VAC	5 A	---
30 VDC	---	0.1 A

Testing conditions: 5E4 (50,000 operations), T125 (0°C to 125°C)

Characteristics

Operating speed		0.1 mm to 1 m/s (for pin plunger models)
Operating frequency	**Mechanical**	400 operations/min max.
	Electrical	30 operations/min max.
Insulation resistance		100 MΩ min.
Contact resistance (initial value)	**OF 1.50 N**	SSG-5 models: 30 mΩ max. SSG-01 models: 50 mΩ max.
	OF 0.50 N	SSG-5 models: 50 mΩ max. SSG-01 models: 100 mΩ max.
Dielectric strength *1	**Between terminals of the same porality**	1,000 VAC, 50/60 Hz for 1 min (600 VAC for SSG-01H and SSG-01T models)
	Between current-carrying metal parts and ground	1,500 VAC, 50/60 Hz for 1 min
	Between each terminals and non-current-carrying metal parts	1,500 VAC, 50/60 Hz for 1 min
Vibration resistance *2	**Malfunction**	10 to 2,000 Hz, 196 m/s^2 {20G}
Shock resistance *2	**Malfunction**	490 m/s^2 {approx. 50G}
Durability *3	**Mechanical**	10,000,000 operations min. (60 operations/min)
	Electrical	200,000 operations min. (30 operations/min)
Degree of protection (IP code)		IEC IP40
Degree of protection against electrical shock		Class I
Proof tracking index		175
Ambient operating temperature		–25°C to +125°C (at ambient humidity of 60% max.) (with no icing or condensation)
Ambient operating humidity		85% max. (+5°C to +30°C)
Weight		Approx. 1.6 g (pin plunger models)

Note: The data given above are initial values.
*1. The values for dielectric strength shown are for models with a Separator (refer to "**Micro Switch Common Accessories**").
*2. The values are at Free Position and Total Travel Position values for pin plunger, and Total Travel Position value for lever type. Close or open circuit of the contact is shorter than 10μs.
*3. For testing conditions, consult your OMRON sales representative.

Terminals/Appearances (Unit: mm)

● Solder terminals

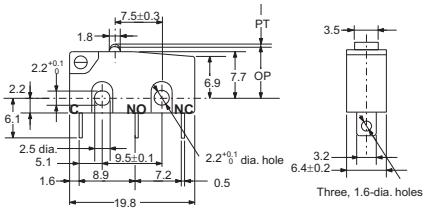

● Quick connect terminals (#110)

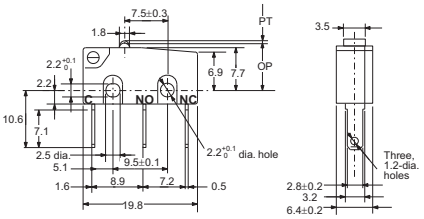

● PCB terminals

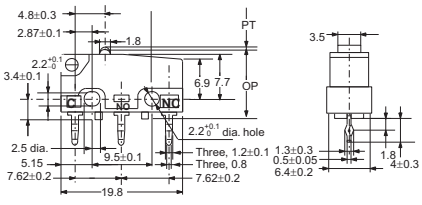

PCB Mounting Dimensions (Reference)

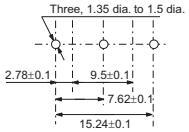

Mounting Holes (Unit: mm)

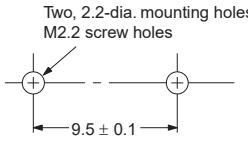

Make sure that the plate to which the SSG is mounted is flat. If the plate has protruding or warped part, the SSG may not operate properly.

Separator (Sold Separately), Terminal Connector (Sold Separately) ➡ Refer to "**Basic Switch Common Accessories**"

Dimensions (Unit: mm) and Operating Characteristics

The illustrations and drawings are for solder terminals models and PCB terminals models.
Refer to **"Terminals/Appearances"** of the previous page for details on models with quick connect terminals (#110).
The □ is replaced with the code for the terminal that you need. See the "List of Models" for available combinations of models.

Solder/Quick-connect Terminals (#110)

● **Pin Plunger**
SSG-5□
SSG-5□-5
SSG-01□
SSG-01□-5

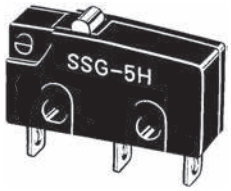

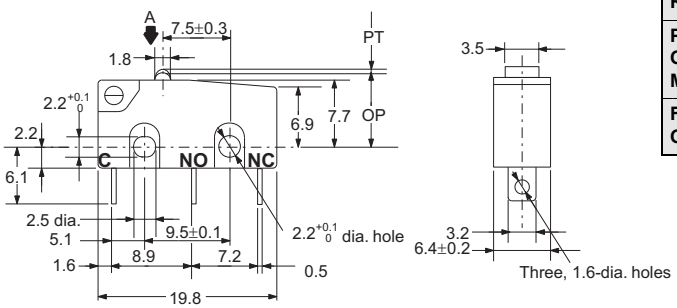

Model	SSG-5□ SSG-01□	SSG-5□-5 SSG-01□-5
OF max. RF min.	1.50 N {153 gf} 0.25 N {25 gf}	0.50 N {51 gf} 0.04 N {4 gf}
PT max. OT min. MD max.	0.6 mm 0.4 mm 0.1 mm	
FP max. OP	--- 8.4±0.3 mm	

● **Hinge Lever**
SSG-5L1□
SSG-5L1□-5
SSG-01L1□
SSG-01L1□-5

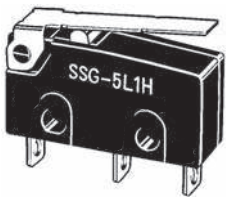

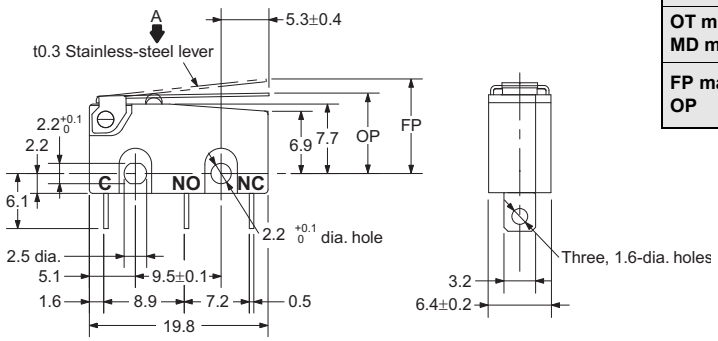

Model	SSG-5L1□ SSG-01L1□	SSG-5L1□-5 SSG-01L1□-5
OF max. RF min.	0.60 N {61 gf} 0.06 N {6 gf}	0.20 N {20 gf} 0.02 N {2 gf}
OT min. MD max.	1.0 mm 0.8 mm	
FP max. OP	13.6 mm $8.8^{+1.0}_{-0.6}$ mm	

Note: Also available are models with a hinge lever length of 26.1 mm under the following model numbers; SSG-01L14□, SSG-5L14□, SSG-01L14□-5, and SSG-5L14□-5. Consult your OMRON sales representative for these models.

● **Hinge Roller Lever**
SSG-5L2□
SSG-5L2□-5
SSG-01L2□
SSG-01L2□-5

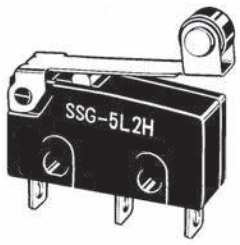

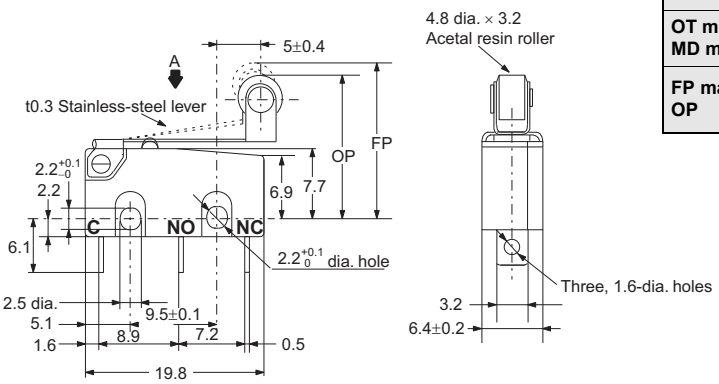

Model	SSG-5L2□ SSG-01L2□	SSG-5L2□-5 SSG-01L2□-5
OF max. RF min.	0.60 N {61 gf} 0.06 N {6 gf}	0.20 N {20 gf} 0.02 N {2 gf}
OT min. MD max.	1.0 mm 0.8 mm	
FP max. OP	19.0 mm $14.5^{+1.0}_{-0.6}$ mm	

Note: 1. Unless otherwise specified, a tolerance of ±0.25 mm applies to all dimensions.
2. The operating characteristics are for operation in the A direction (⬇).

● Simulated Roller Lever

SSG-5L3□
SSG-5L3□-5
SSG-01L3□
SSG-01L3□-5

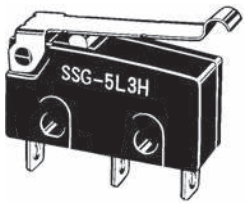

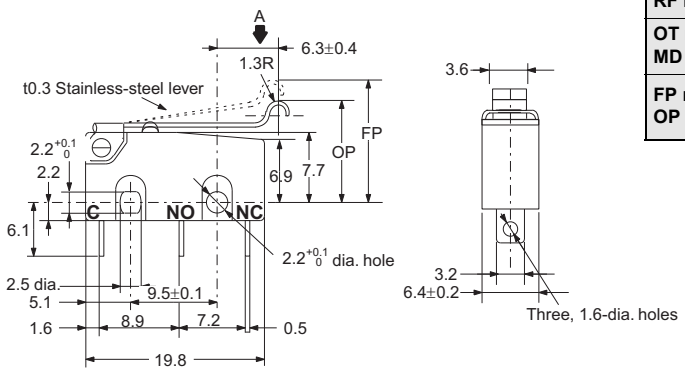

Model	SSG-5L3□ SSG-01L3□	SSG-5L3□-5 SSG-01L3□-5
OF max. RF min.	0.60 N {61 gf} 0.06 N {6 gf}	0.20 N {20 gf} 0.02 N {2 gf}
OT min. MD max.	1.0 mm 0.8 mm	
FP max. OP	15.5 mm $10.7^{+1.0}_{-0.6}$ mm	

PCB Terminal

● Pin Plunger

SSG-5P
SSG-5P-5
SSG-01P
SSG-01P-5

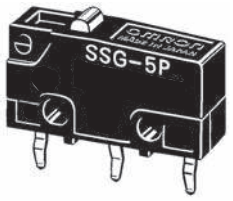

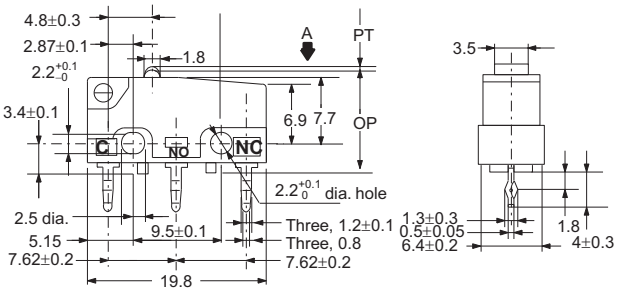

Model	SSG-5P SSG-01P	SSG-5P-5 SSG-01P-5
OF max. RF min.	1.50 N {153 gf} 0.25 N {25 gf}	0.50 N {51 gf} 0.04 N {4 gf}
PT max. OT min. MD max.	0.6 mm 0.4 mm 0.1 mm	
FP max. OP	--- 11.8±0.4 mm	

● Hinge Lever

SSG-5L1P
SSG-5L1P-5
SSG-01L1P
SSG-01L1P-5

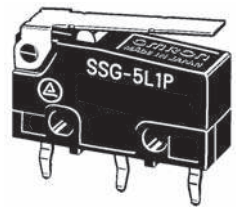

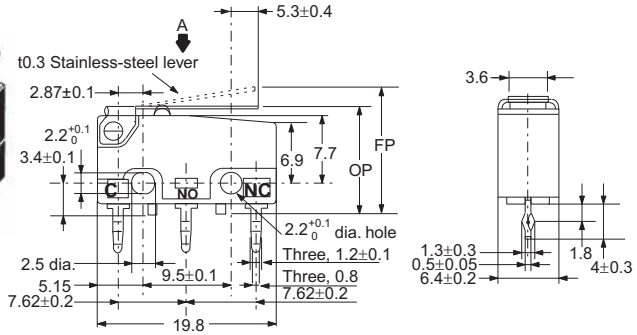

Model	SSG-5L1P SSG-01L1P	SSG-5L1P-5 SSG-01L1P-5
OF max. RF min.	0.60 N {61 gf} 0.06 N {6 gf}	0.20 N {20 gf} 0.02 N {2 gf}
OT min. MD max.	1.0 mm 0.8 mm	
FP max. OP	17.0 mm $12.2^{+1.1}_{-0.7}$ mm	

Note: Also available are models with a hinge lever length of 26.1 mm under the following model numbers; SSG-01L14P, SSG-5L14P, SSG-01L14P-5, and SSG-5L14P-5. Consult your OMRON sales representative for these models.

Note: 1. Unless otherwise specified, a tolerance of ±0.25 mm applies to all dimensions.
2. The operating characteristics are for operation in the A direction (⬇).

● Hinge Roller Lever

SSG-5L2P
SSG-5L2P-5
SSG-01L2P
SSG-01L2P-5

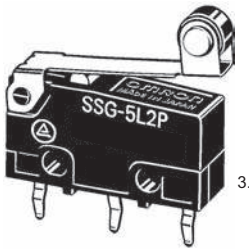

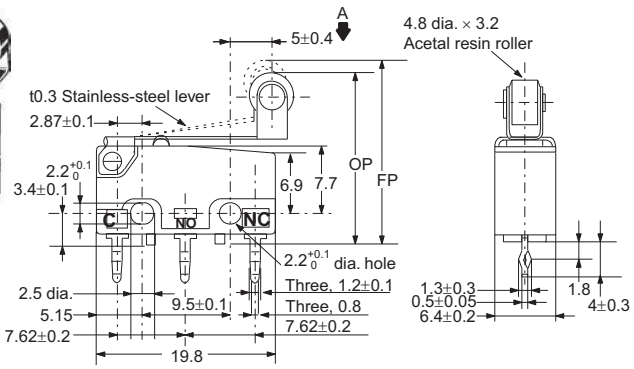

Model	SSG-5L2P SSG-01L2P	SSG-5L2P-5 SSG-01L2P-5
OF max. RF min.	0.60 N {61 gf} 0.06 N {6 gf}	0.20 N {20 gf} 0.02 N {2 gf}
OT min. MD max.	1.0 mm 0.8 mm	
FP max. OP	22.4 mm $17.9^{+1.1}_{-0.7}$ mm	

● Simulated Roller Lever

SSG-5L3P
SSG-5L3P-5
SSG-01L3P
SSG-01L3P-5

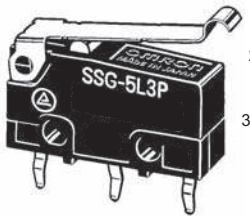

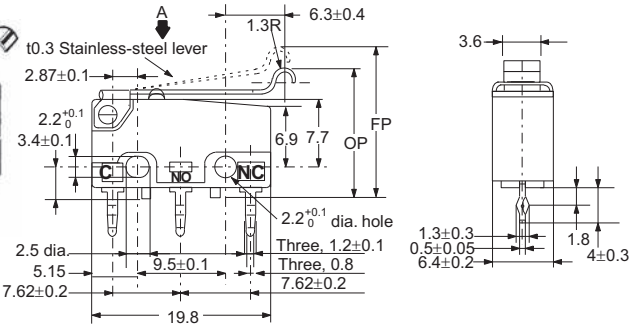

Model	SSG-5L3P SSG-01L3P	SSG-5L3P-5 SSG-01L3P-5
OF max. RF min.	0.60 N {61 gf} 0.06 N {6 gf}	0.20 N {20 gf} 0.02 N {2 gf}
OT min. MD max.	1.0 mm 0.8 mm	
FP max. OP	18.9 mm $14.1^{+1.1}_{-0.7}$ mm	

Note: 1. Unless otherwise specified, a tolerance of ±0.25 mm applies to all dimensions.
2. The operating characteristics are for operation in the A direction (⬇).

Precautions

Refer to *General Information*.

Cautions

● Terminal Connection

When soldering the lead wire to the terminal, first insert the lead wire conductor through the terminal hole and then take the following steps promptly.

- Make sure that the capacity of the soldering iron is 60 W (temperature of soldering iron : 350 to 400°C) maximum. Do not take more than 3 s to solder the switch terminal. Improper soldering involving an excessively high temperature or excessive soldering time may deteriorate the characteristics of the Switch.
- Be sure to apply only the minimum required amount of flux. The SSG may have contact failures if flux intrudes into the interior of the SSG.

260+/-5°C for 5 seconds max. is recommended for flow soldering. Overflow of solder or flux should be avoided.
Wire the quick-connect terminals (#110) with receptacles. Insert the terminals straight into the receptacles. Do not impose excessive force on the terminal in the horizontal direction, otherwise the terminal may be deformed or the housing may be damaged.

● Insulation Distance

The Switch does not have a ground terminal. According to EN61058-1, the minimum insulation thickness for this Switch should be 0.9 mm. If the insulation distance cannot be provided in the product incorporating the Switch, either use a Switch with insulation barrier or use a Separator to ensure sufficient insulation distance.

Correct Use

● Mounting

Use M2.2 mounting screws with plane washers or spring washers to securely mount the Switch. Tighten the screws to a torque of 0.20 to 0.24 N·m {2 to 2.5 kgf·cm}.

● Operating Stroke

Make sure that the operating stroke is 70% to 100% of the rated OT distance. Do not operate the actuator exceeding the OT distance, otherwise the durability of the Switch may be shortened.

● Using Micro Loads

Using a model for ordinary loads to open or close the contact of a micro load circuit may result in faulty contact. Use models that operate in the following range. However, even when using micro load models within the operating range shown below, if inrush current occurs when the contact is opened or closed, it may increase contact wear and so decrease durability. Therefore, insert a contact protection circuit where necessary.
The minimum applicable load is the N-level reference value. This value indicates the malfunction reference level for the reliability level of 60% (λ 60). The equation, $\lambda\ 60 = 0.5\times10^{-6}$/operations indicates that the estimated malfunction rate is less than 1/2,000,000 operations with a reliability level of 60%.

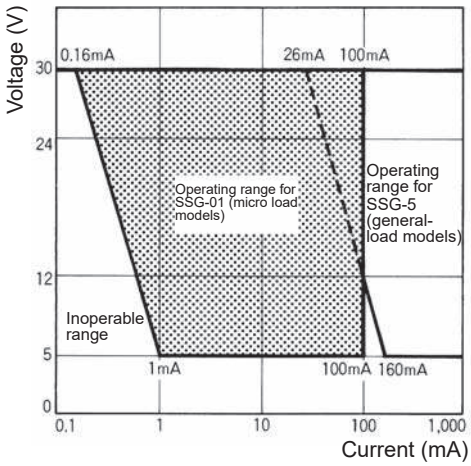

Please check each region's Terms & Conditions by region website.

OMRON Corporation
Device & Module Solutions Company

Regional Contact

Americas
https://components.omron.com/us
Asia-Pacific
https://components.omron.com/ap
Korea
https://components.omron.com/kr
Europe
https://components.omron.com/eu
China
https://components.omron.com.cn
Japan
https://components.omron.com/jp

© OMRON Corporation 2012-2023 All Rights Reserved.
In the interest of product improvement, specifications are subject to change without notice.

Cat. No. B096-E1-07
1023 (0812)