Distributor, Series AS1-DIS

R412014662

General series information
Series AS1

- The AVENTICS Series AS1 is a modular, versatile maintenance unit for universal application. This Series offers compact dimensions, is highly efficient, lightweight and easy-to-use. The AVENTICS Series AS guarantees reliability, safety, and efficiency with a simplified assembly and maintenance efforts.



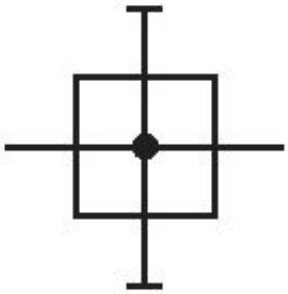

Technical data

Industry	Industrial
Parts	Distributor
Port	G 1/4
Air supply	left
Type	Can be assembled into blocks
Version	Distributor 2x
Mounting orientation	Any
Working pressure min.	0 bar
Working pressure max	12 bar
Min. ambient temperature	-10 °C
Max. ambient temperature	50 °C
Medium	Compressed air

	Neutral gases
Nominal flow Qn	2700 l/min
Nominal flow Qn 1 to 2	2700 l/min
Nominal flow 1 # 3	950 l/min
Nominal flow 1 # 5	2000 l/min
Weight	0.148 kg
Housing material	Polyamide
Material front plate	Acrylonitrile butadiene styrene
Seal material	Acrylonitrile butadiene rubber
	R412014662

Technical information

The pressure dew point must be at least 15 °C less than ambient and medium temperature and may not exceed 3 °C.

Nominal flow Qn with secondary pressure p2 = 6 bar at Δp = 1 bar

Dimensions in mm

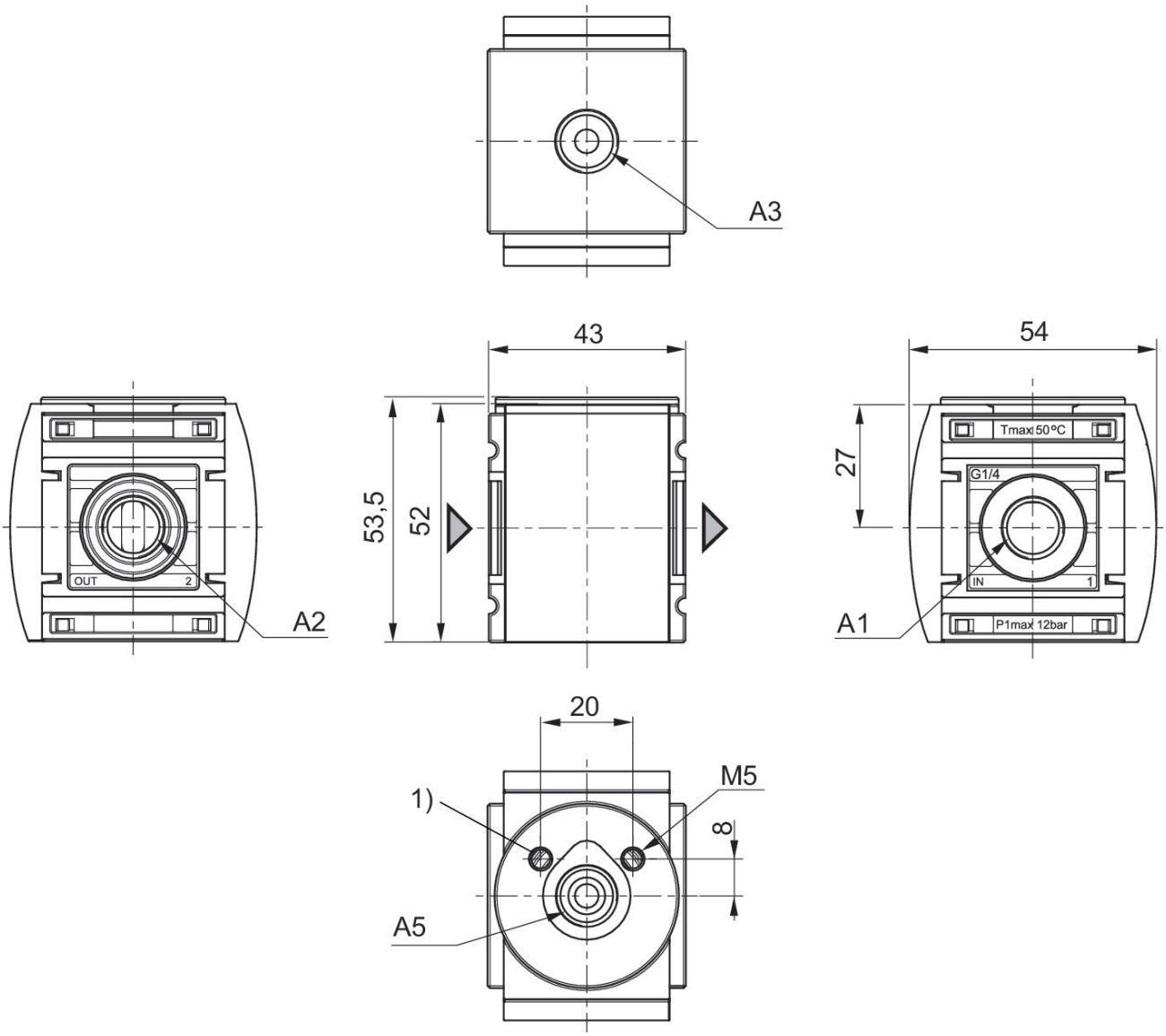

A1 = input
A2 = output
A3 = output G 1/4
A5 = output G 1/4
1) Mounting thread for pressure sensor

Accessories overview

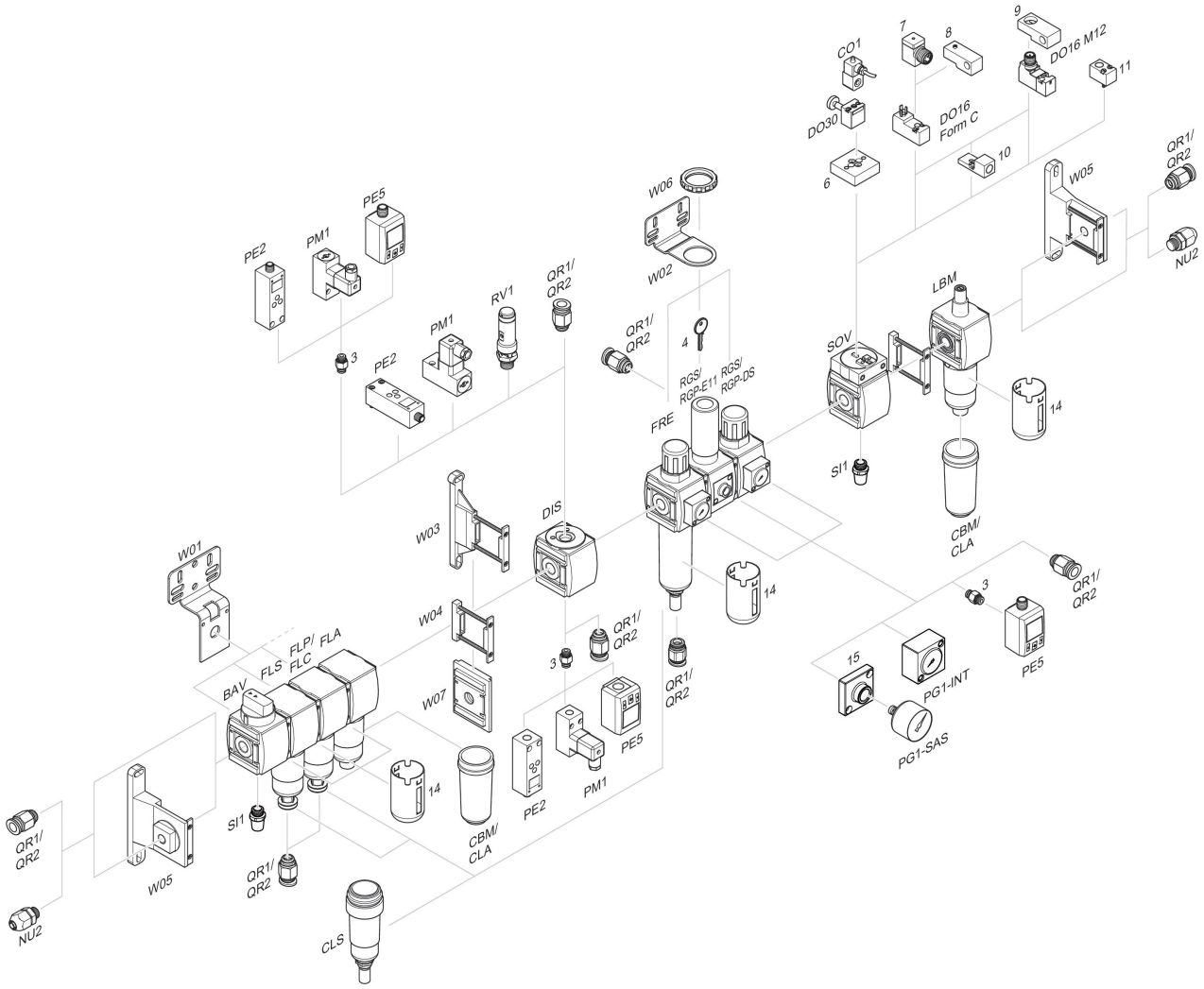

3 = Double nipple 4 = Key for E11 locking 6 = Transition plate DO30 7 = Adapter, Series CON-VP 8 = Mounting aid DO16, form C 9 = Mounting aid DO16, M12 10 = Adapter for external pilot air 11 = Adapter pneumatic operation 14 = Protective guard 15 = Transition plate for assembling a pressure gauge with connection thread G 1/8