6101-0046 Differential Pressure Switch

herga Technology Ltd

- GT27028 differential pressure switch
- Pressure range: 1.00” to 5.00” H_20
- Single pole change over contacts
- Diaphragm material: Post cured Silicone
- Burst pressure: 1 PSI
- Operating Temperature: -25°C to +105°C
- Electrical rating: 5A 250V AC
- UL, CSA & CE Certified
- Vertical mount recommended



Dimensions

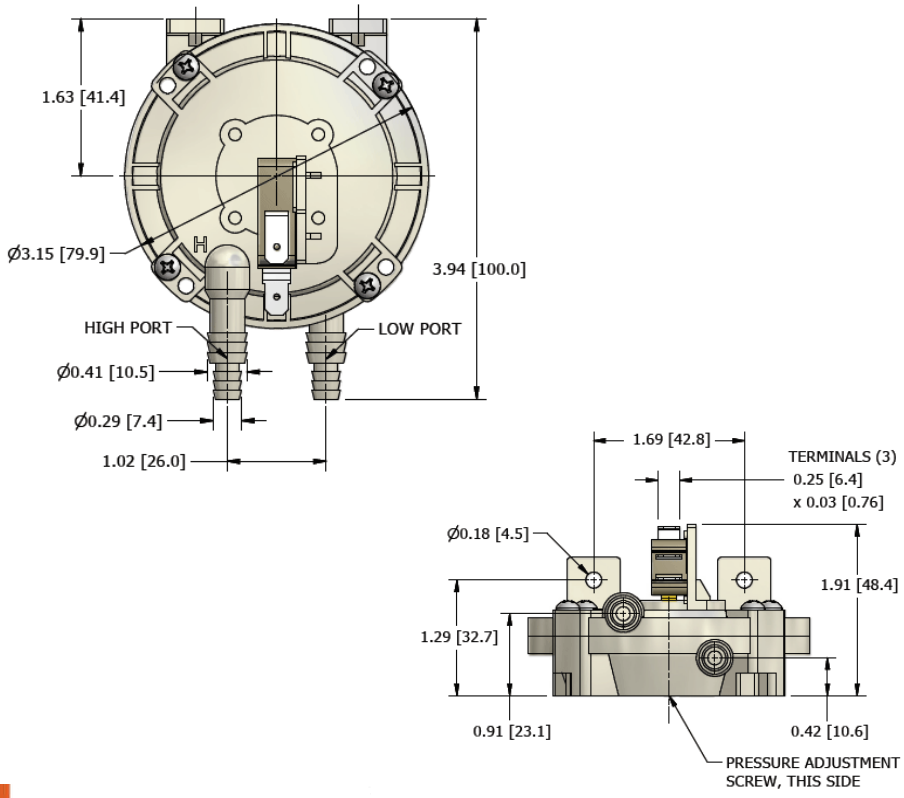

herga Technology Ltd