O5D151

Photoelectric distance sensor

O5DLCPKG/US

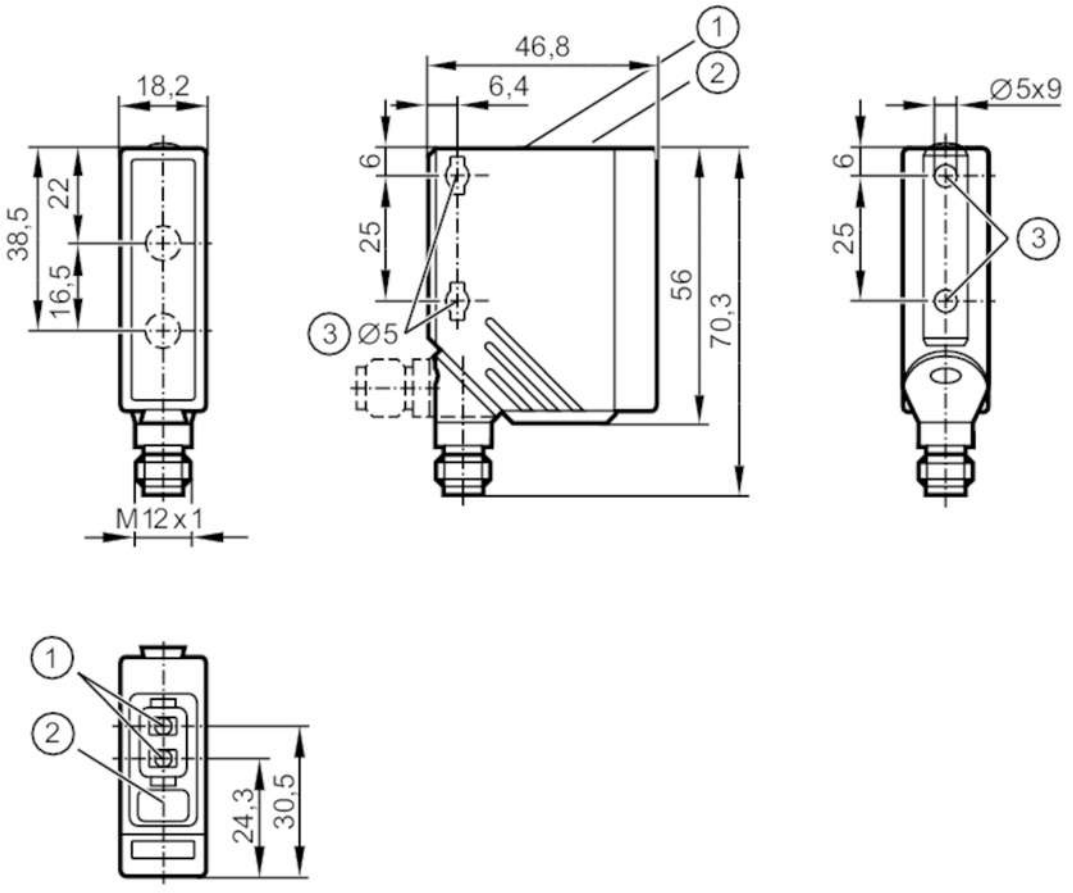

1: setting pushbuttons
2: alphanumeric display 3-digit
3: Tightening torque < 2 Nm when using a mounting screw M5
---
receiver in upper lens
transmitter in lower lens

Product characteristics		
Type of light		red light
Laser protection class		1
Housing		rectangular
Application		
Special feature		Background suppression
Electrical data		
Operating voltage	[V]	10...30 DC; ("supply class 2" to cULus)
Current consumption	[mA]	< 75; (@ 24 V DC)
Protection class		III
Reverse polarity protection		yes
Type of light		red light
Wave length	[nm]	650
Typ. lifetime	[h]	50000

O5D151

Photoelectric distance sensor

O5DLCPKG/US

Inputs / outputs		
Number of inputs and outputs		Number of digital outputs: 2
Outputs		
Total number of outputs		2
Electrical design		PNP
Number of digital outputs		2
Output function		normally open / normally closed; (complementary)
Max. current load per output	[mA]	100
Switching frequency DC	[Hz]	11
Short-circuit protection		yes
Type of short-circuit protection		pulsed
Overload protection		yes
Detection zone		
Max. light spot diameter	[mm]	5
Light spot dimensions refer to		2 m
Detection range hysteresis	[%]	< 4
Note on monitoring range hysteresis		black 6% remission
Background suppression available		yes
Background suppression	[m]	< 20
Measuring/setting range		
Measuring range	[m]	0.03...2
Sampling rate	[Hz]	33
Interfaces		
Communication interface		IO-Link
Transmission type		COM2 (38,4 kBaud)
IO-Link revision		1.1
SDCI standard		IEC 61131-9
Profiles		Smart Sensor: Sensor Identification; Binary Data Channel; Process Value; Sensor Diagnosis
SIO mode		yes
Process data analogue		1
Process data binary		1
Min. process cycle time	[ms]	6.6
Supported DeviceIDs		**Type of operation** / **DeviceID**: default / 393
Operating conditions		
Ambient temperature	[°C]	-25...60
Note on ambient temperature		at ta < -10 °C warm-up is necessary, laser is off
Protection		IP 65; IP 67
Max. immunity to extraneous light	[klx]	10; (on the object)

O5D151

Photoelectric distance sensor

O5DLCPKG/US

Tests / approvals			
EMC		EN 60947-5-2	
Vibration resistance		DIN EN 60068-2-6	10 g (10...55 Hz) / 120 min. per axis (x, y, z)
Shock resistance		DIN EN 60068-2-27	50 g 6 shocks / 11 ms half-sine (x, y, z)
Laser protection class		1	
Notes on laser protection		Caution:	laser light
		laser class:	1
			EN / IEC60825-1:2007
			EN / IEC60825-1:2014
			Complies with 21 CFR 1040 except for deviations pursuant to Laser Notice No. 50, dated June 2007.
MTTF	[years]	151	
Mechanical data			
Weight	[g]	84	
Housing		rectangular	
Dimensions	[mm]	56 x 18.2 x 46.8	
Materials		housing: PA; bezel: stainless steel; operator interface: TPU; lens: PMMA	
Lens alignment		side lens	
Displays / operating elements			
Display		switching status	LED, yellow switching output PIN 4
		operation	LED, green
		display	alphanumeric display, 3-digit
Display unit		inch	
Remarks			
Pack quantity		1 pcs.	

Electrical connection

Connector: 1 x M12; coding: A



O5D151

Photoelectric distance sensor

O5DLCPKG/US

Connection

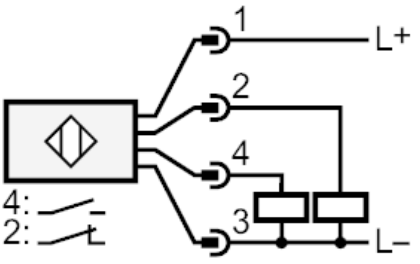

4: OUT / IO-Link

Other data

accuracy

	accuracy			
distance	black (6 % remission)	white (90 % remission)		
0 mm	± 25 mm	± 25 mm		
500 mm	± 25 mm	± 25 mm		
1000 mm	± 25 mm	± 25 mm		
1500 mm	± 40 mm	± 30 mm		
2000 mm	± 50 mm	± 30 mm		

Extraneous light on the object < 10 klx

Diagrams and graphs

hysteresis graph

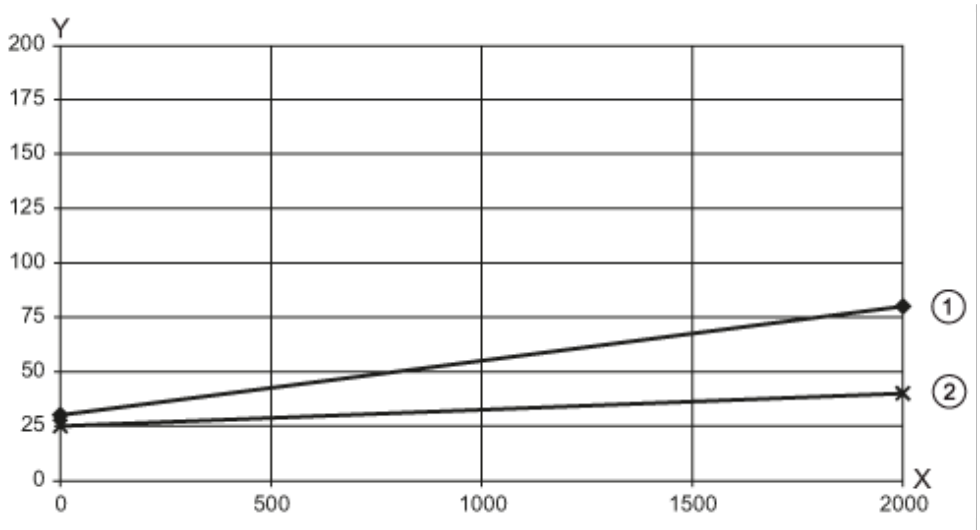

x: distance [mm]

y: Hysteresis [mm]

1 = background black 6% remission

2 = background white 90% remission