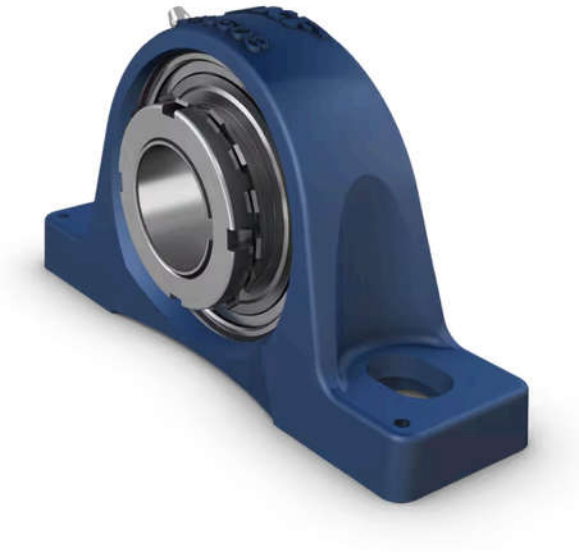

Image may differ from product. See technical specification for details.

# SYJ 45 KF

**Pillow block ball bearing unit with adapter sleeve locking, cast iron, Japanese standards**

Pillow (plummer) block ball bearing units consist of an insert bearing mounted in a cast iron housing that can be bolted to a support surface. This variant is suitable for applications with both constant and alternating directions of rotation. It is locked with an adapter

sleeve, enabling quick and easy mounting onto the shaft. Adapter sleeve needs to be ordered separately.

- Strong
- Ready to mount
- Designed for a constant and alternating rotation
- Lubricated and sealed bearing
- Quick locking onto the shaft
- Cost-effective

# Overview

## Dimensions

| | |
|---|---|
| Attachment bolt diameter | 14 mm |
| Shaft diameter | 40 mm |
| Centre height (pillow block) | 54 mm |
| Housing overall width | 52 mm |
| Centre distance between bolt holes | 143.5 mm |
| Bearing width, total | 34.9 mm |

## Performance

| | |
|---|---|
| Basic dynamic load rating | 33.2 kN |
| Basic static load rating | 21.6 kN |
| Limiting speed | 4 300 r/min |

## Properties

| | |
|---|---|
| Associated mounting tool | HN 9 |
| Housing type | Pillow block |
| Number of bolt holes for fasteners | 2 |
| Fastening bolt hole type | Plain |
| Retaining feature, inner ring | Adapter sleeve |
| Bore type | Tapered |
| Rubber seating ring | Without |
| Material, housing | Cast iron |
| Material, bearing | Bearing steel |
| Coating | Without |
| Sealing, bearing | Seal and flinger on both sides |
| Sealing type | Contact, standard |
| Sealing, unit | Without |
| Lubricant | Grease |
| Relubrication hole | With |
| Grease fitting | With |

## Logistics

| | |
|---|---|
| Product net weight | 2.14 kg |
| eClass code | 23-05-16-02 |
| UNSPSC code | 31171536 |

# Technical specification

| | |
|---|---|
| Note about ordering information | Order adapter sleeve separately |
| Compliance with standard | JIS |
| Material, housing | Cast iron |
| Sealing, bearing | Seal and flinger on both sides |
| Sealing type, bearing | Contact, standard |
| Sealing, unit | Without |
| Coating | Without |

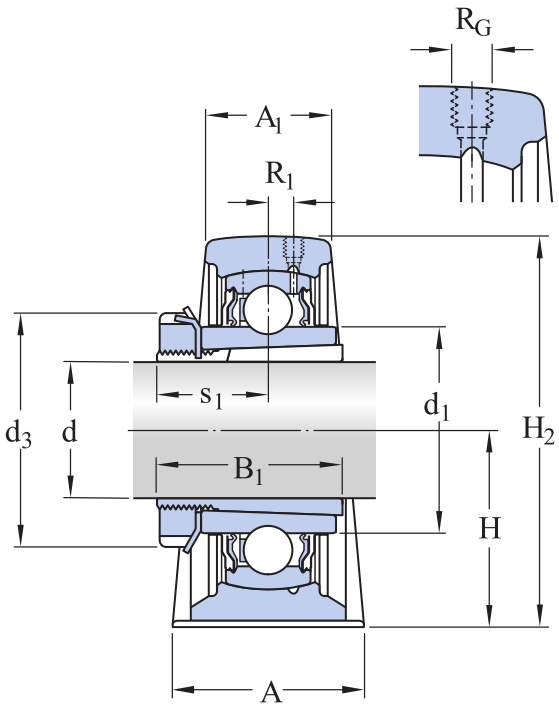

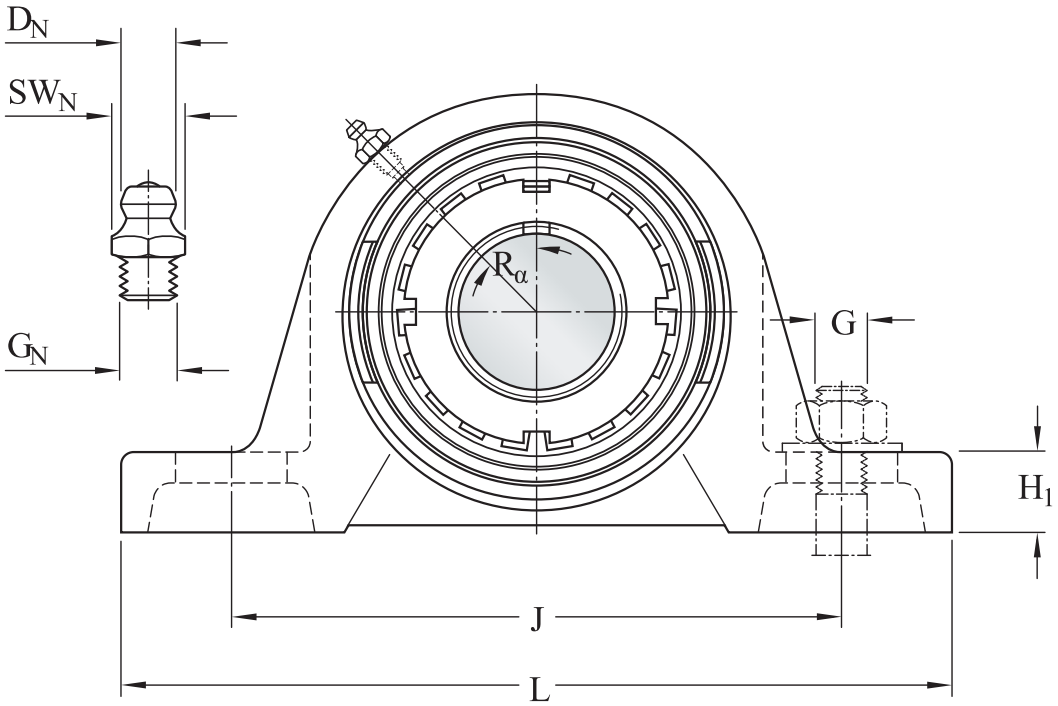


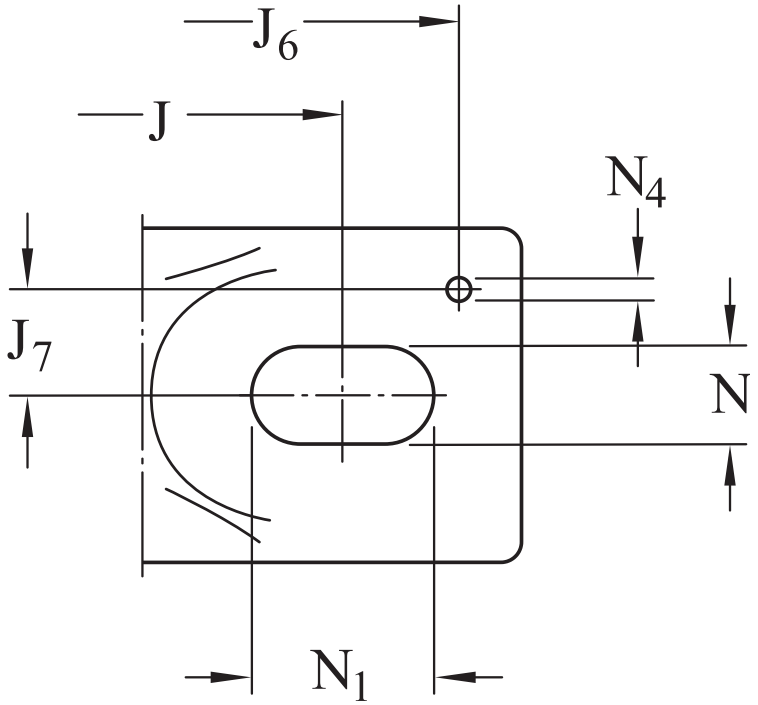


## Dimensions

| | | |
|---|---|---|
| d | 40 mm | Bore diameter |
| $d_1$ | ≈ 56.8 mm | Shoulder diameter of inner ring |
| $d_3$ | 65 mm | Outside diameter of lock nut |
| A | 52 mm | Base width |

| | | |
|---|---|---|
| $A_1$ | 36 mm | Top width |
| $B_1$ | 34.9 mm | Overall bearing width |
| $B_1$ | 50 mm | Width of sleeve |
| H | 54 mm | Height of spherical seat centre |
| $H_1$ | 20 mm | Foot height |
| $H_2$ | 107.5 mm | Overall height |
| J | 143.5 mm | Distance between attachment bolts |
| J | max. 151 mm | Maximum distance between attachment bolts |
| J | min. 136 mm | Minimum distance between attachment bolts |
| L | 190 mm | Overall length |
| N | 17 mm | Diameter of attachment bolt hole |
| $N_1$ | 24.5 mm | Length of attachment bolt hole |
| $s_1$ | 28.75 mm | Distance from locking device side face to raceway centre |
| | Value specified for $s_1$ is approximate and before the sleeve is driven into the bearing bore (sleeve and inner ring bore at starting position). | Note dimension(s) |

## GREASE FITTING

| | | |
|---|---|---|
| $D_N$ | 6.5 mm | Diameter of head sphere of grease fitting |
| $SW_N$ | 7 mm | Hexagonal key size for the grease fitting |
| $G_N$ | 1/4-28 SAE-LT | Thread of grease fitting |

## DOWEL PINS

| | | |
|---|---|---|
| $J_6$ | 174 mm | Distance of dowel pins |
| $J_7$ | 18 mm | Axial offset of dowel pins |
| $N_4$ | 4 mm | Recommended diameter for dowel pins |

## THREADED HOLE

| | | |
|---|---|---|
| $R_G$ | 1/4-28 UNF | Housing thread for the grease fitting |
| $R_1$ | 4 mm | Axial position of the housing thread |
| $R_\alpha$ | 45 ° | Angular position of the housing thread |

## Calculation data

| | | |
|---|---|---|
| Basic dynamic load rating | C | 33.2 kN |
| Basic static load rating | $C_0$ | 21.6 kN |
| Fatigue load limit | $P_u$ | 0.915 kN |
| Limiting speed | | 4 300 r/min |

## Mounting information

| | | |
|---|---|---|
| Associated spanner | | HN 9 |
| Recommended lock nut tightening angle | α | 110 ° |
| Recommended diameter for attachment bolts, mm | G | 14 mm |
| Recommended diameter for attachment bolts, inch | G | 0.5625 in |

## Tolerances and clearances

### The values depend on the included bearing:

- Bore diameter tolerance → table 1
- Radial internal clearance → table 2
- Recommended fit → table 3
- Shaft tolerance → table 4

# Compatible products

## Component

| | |
|---|---|
| Pillow block housing for insert bearings, cast iron, Japanese standards | SYJ 509 |
| Insert bearing with tapered bore and adapter sleeve locking | YSA 209-2FK |

## Recommended product

| | |
|---|---|
| Adapter sleeve with KM lock nut and MB lock washer, metric dimensions | H 2309 |

## More Information

### Product details

- Pillow block units to ISO standards
- Pillow block units to North American standards
- Pillow block units to Japanese Industrial Standards (JIS)
- Pillow block units, not standardized (incl. SKF Food Line)
- Permissible misalignment
- Locating/non-locating support
- Loads
- Temperature limits
- Permissible speed
- Lubrication
- Mounting and dismounting
- Ordering information
- Designation system

### Engineering information

- Principles of ball bearing units selection and application - Download catalogue (4.9 MB)
- Principles of selecting mounted bearing solutions
- Bearing failure and how to prevent it

### Tools

- SKF Product select
- Bearing Frequency Calculator

# Terms of use

By accessing and using this website / app owned and published by AB SKF (publ.) (556007-3495 · Gothenburg) (“SKF”), you agree to the following terms and conditions:

### Warranty Disclaimer and Limitation of Liability

Although every care has been taken to assure the accuracy of the information on this website / app, SKF provides this information "AS IS" and DISCLAIMS ALL WARRANTIES, EXPRESS OR IMPLIED, INCLUDING, BUT NOT LIMITED TO, IMPLIED WARRANTIES OF MERCHANTABILITY AND FITNESS FOR A PARTICULAR PURPOSE. You acknowledge that your use of this website / app is at your sole risk, that you assume full responsibility for all costs associated with use of this website / app, and that SKF shall not be liable for any direct, incidental, consequential, or indirect damages of any kind arising out of your access to, or use of the information or software made available on this website / app.

Any warranties and representations in this website / app for SKF products or services that you purchase or use will be subject to the agreed upon terms and conditions in the contract for such product or service.

Further, for non-SKF websites / apps that are referenced in our website / app or where a hyperlink appears, SKF makes no warranties concerning the accuracy or reliability of the information in these websites / apps and assumes no responsibility for material created or published by third parties contained therein. In addition, SKF does not warrant that this website / app or these other linked websites / apps are free from viruses or other harmful elements.

### Third Party Services

When viewing YouTube content via the SKF website(s) (i.e. using YouTube API Services), you agree to be bound by the YouTube Terms of Service.

### Copyright

Copyright in this website / app copyright of the information and software made available on this website / app rest with SKF or its licensors. All rights are reserved. All licensed material will reference the licensor that has granted SKF the right to use the material. The information and software made available on this website / app may not be reproduced, duplicated, copied, transferred, distributed, stored, modified, downloaded or otherwise exploited for any commercial use without the prior written approval of SKF. However, it may be reproduced, stored and downloaded for use by individuals without prior written approval of SKF. Under no circumstances may this information or software be supplied to third parties.

This website /app includes certain images used under license from Shutterstock, Inc.

### Trademarks and Patents

All trademarks, brand names, and corporate logos displayed on the website / app are the property of SKF or its licensors, and may not be used in any way without prior written approval by SKF. All licensed trademarks published on this website / app reference the licensor that has granted SKF the right to use the trademark. Access to this website / app does not grant to the user any license under any patents owned by or licensed to SKF.

### Changes

SKF reserves the right to make changes or additions to this website / app at any time.