WIRING DIAGRAMS

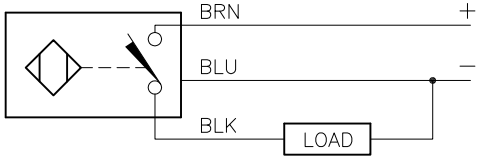

OUTPUT: AP6X2

SHORT−CIRCUIT AND OVERLOAD PROTECTED

LOCKNUT LN−M30

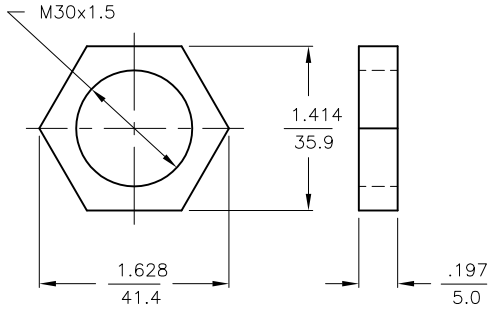

SPECIFICATIONS

RATED OPERATING DISTANCE	10mm = .394"
MOUNTING MODE	FLUSH
MIN. REPEAT ACCURACY	≤ 2%
HYSTERESIS	3−15%
OPERATING TEMPERATURE	−25°C to +70°C (−13°F to +158°F)
RATED OPERATIONAL VOLTAGE	10−30 VDC
RESIDUAL RIPPLE	≤ 10%
DC RATED OPERATIONAL CURRENT	≤ 200 mA
NO−LOAD CURRENT	≤ 15 mA
RESIDUAL CURRENT	≤ 0.1 mA
RATED INSULATION VOLTAGE	≤ 0.5 kV
SHORT−CIRCUIT PROTECTION	YES/CYCLIC
MAX. VOLTAGE DROP	≤ 1.8 V
WIRE BREAKAGE PROTECTION	INCORPORATED
REVERSE POLARITY PROTECTION	INCORPORATED
OUTPUT FUNCTION	3−WIRE, NORMALLY OPEN, PNP
MAX. SWITCHING FREQUENCY	≤ 0.5 kHz
HOUSING MATERIAL	METAL, BRASS/CHROME−PLATED
ACTIVE FACE MATERIAL	PLASTIC, PA12−GF30
CONNECTION	TERMINAL CHAMBER
VIBRATION RESISTANCE	55 Hz, 1 mm AMPLITUDE (IN ALL 3 PLANES)
SHOCK RESISTANCE	30 g, 11 ms
DEGREE OF PROTECTION	IP67
SWITCHING STATUS INDICATION	LED, YELLOW

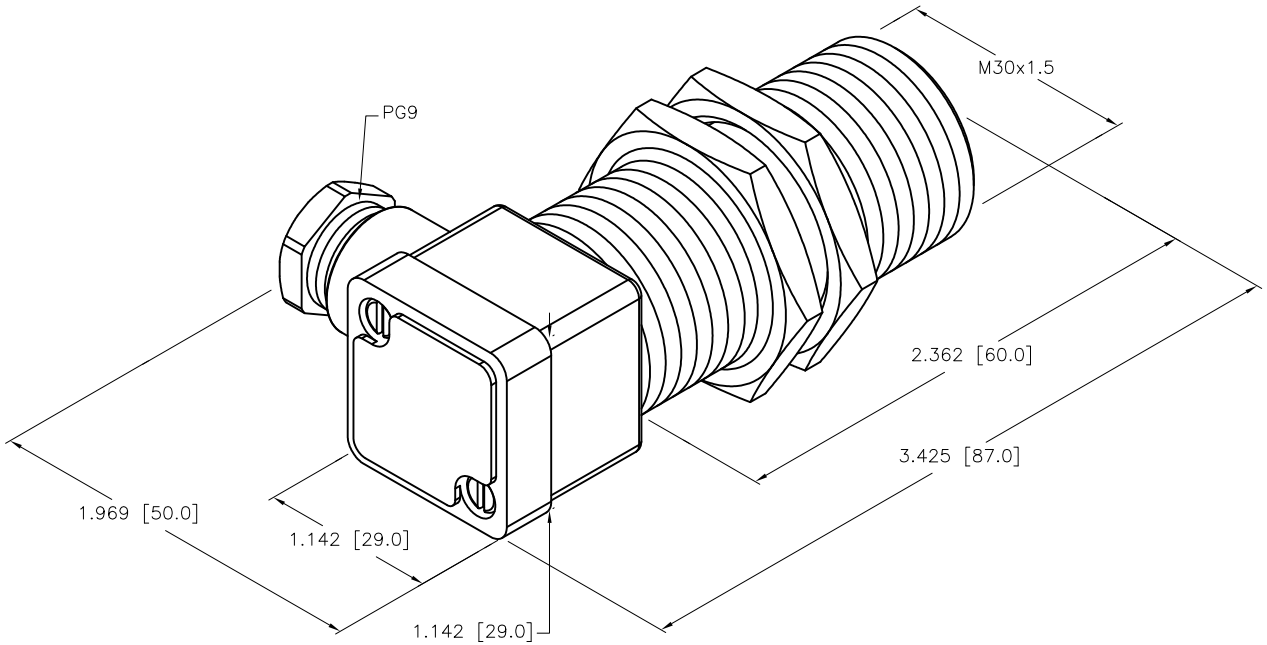

SOURCE DRAWING - FOR REFERENCE ONLY

REV	DESCRIPTION	BY	DATE	ECO NO.
A	SEE REVISION DOC. G30SKANG	SWC	9/9/93	

RELATED DOCUMENTS
1.
2.
3.
4.

3RD ANGLE PROJECTION

THIS DRAWING IS CONFIDENTIAL AND THE PROPERTY OF TURCK INC. USE OF THIS DOCUMENT WITHOUT WRITTEN PERMISSION IS PROHIBITED.

TURCK INC
High Technology Sensors and Automation Controls
3000 CAMPUS DRIVE
MINNEAPOLIS, MN 55441
1−800−544−7769
(763) 553−7300
(763) 553−0708 fax
turck.com

MATERIAL

FINISH

ALL DIMENSIONS DISPLAYED ON THIS DRAWING ARE FOR REFERENCE ONLY

CONTACT TURCK FOR MORE INFORMATION

DRFT GMB | DATE 03/07/88
APVD | SCALE 1=1.0

UNIT OF MEASUREMENT
INCH [MILLIMETER]
DO NOT SCALE THIS DRAWING

DESCRIPTION: BI10−G30SK−AP6X2

IDENTIFICATION NO.: T4648400 | REV: A

FILE: T4648400 | SHEET 1 OF 1