Product data sheet
Characteristics

XS618B1PBL10EX
inductive sensor hazardous area - M18 - Sn8mm - 12..48VDC - NC - cable 10m



Main

Range of product	OsiSense XS ATEX D
Series name	Application
Sensor type	Inductive proximity sensor
Device application	ATEX dust
Sensor name	XS6
Sensor design	Cylindrical M18
Size	62 mm
Body type	Fixed
Detector flush mounting acceptance	Flush mountable
Material	Metal
Enclosure material	Nickel plated brass
[Sn] nominal sensing distance	8 mm
Type of output signal	Discrete
Wiring technique	3-wire
Discrete output function	1 NC
Output circuit type	DC
Discrete output type	PNP
Electrical connection	Cable
Cable length	10 m
[Us] rated supply voltage	12...48 V DC with reverse polarity protection
Switching capacity in mA	<= 200 mA with overload and short-circuit protection
IP degree of protection	IP68 conforming to IEC 60529 IP69K

Complementary

Thread type	M18 x 1
Detection face	Frontal
Front material	PPS
Sensing range	> 4...8 mm
Operating zone	0…6.4 mm
Differential travel	1...15% of Sr
Cable composition	3 x 0.34 mm²
Wire insulation material	PvR
Status LED	Output state: 1 LED (yellow)
Supply voltage limits	10…58 V DC
Switching frequency	<= 1000 Hz
Maximum voltage drop	<2 V (closed state)
Current consumption	<= 10 mA no-load
Maximum delay first up	10 ms
Maximum delay response	0.3 ms
Maximum delay recovery	0.7 ms
Marking	II2 D-Ex tb IIIC T90°C Db IP68
Threaded length	51 mm

The information provided in this documentation contains general descriptions and/or technical characteristics of the performance of the products contained herein.
This documentation is not intended as a substitute for and is not to be used for determining suitability or reliability of these products for specific user applications.
It is the duty of any such user or integrator to perform the appropriate and complete risk analysis, evaluation and testing of the products with respect to the relevant specific application or use thereof.
Neither Schneider Electric Industries SAS nor any of its affiliates or subsidiaries shall be responsible or liable for misuse of the information contained herein.

Height	18 mm
Length	61 mm

Environment

Environmental characteristic	Hazardous location
Standards	EN/IEC 60079-31 EN/IEC 60079-0
Directives	2014/34/EU - ATEX directive
Product certifications	INERIS 04ATEX0022X IEC-Ex INE 17.0006
Ambient air temperature for operation	-20…60 °C
Vibration resistance	25 gn amplitude = +/- 2 mm (f = 10…55 Hz) conforming to IEC 60068-2-6
Shock resistance	50 gn for 11 ms conforming to IEC 60068-2-27
Dust zone	Zone 21 - 22

Packing Units

Package 1 Weight	340 g
Package 2 Weight	3.855 kg

Offer Sustainability

Sustainable offer status	Green Premium product
REACh Regulation	REACh Declaration
EU RoHS Directive	Pro-active compliance (Product out of EU RoHS legal scope) EU RoHS Declaration
Mercury free	Yes
RoHS exemption information	Yes
Environmental Disclosure	Product Environmental Profile
Circularity Profile	End Of Life Information

Contractual warranty

Warranty	18 months

XS618B1PBL10EX

Dimensions

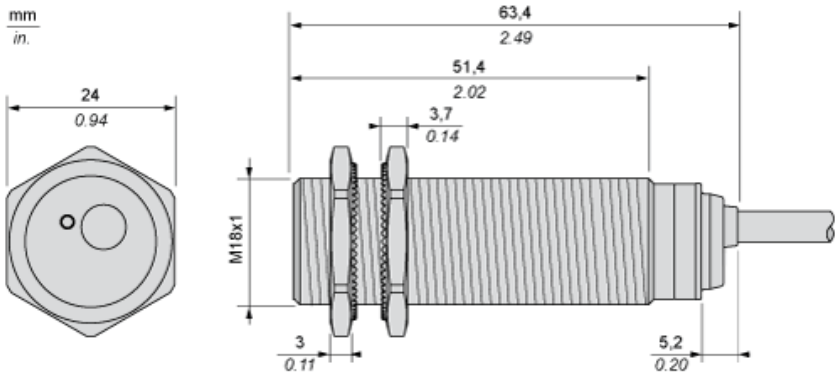

Minimum Mounting Distances

Side by side

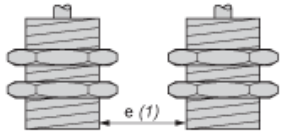

e (1) 16 mm/0.63 in.
≥

Face to face

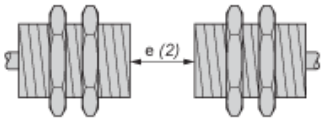

e (2) 100 mm/3.94 in.
≥

Facing a metal object

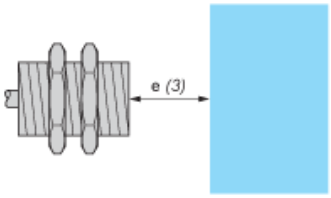

e (3) 25 mm/0.98 in
≥

Mounting

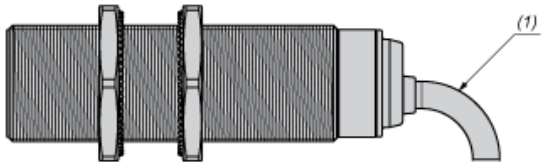

(1) Bending cable: 4 x external cable diameter

Wiring Schemes

PNP

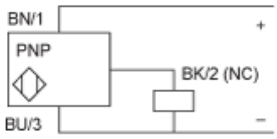

BU : Blue
BN : Brown
BK : Black