Option selector

B68★ – ★★★ – ★★★ – ★★★

Bowl/ Element
E Long
G Short

Thread
A PTF
B ISO Rc tapered
G ISO G parallel
N No yoke (N in 5th position) Rc gauge ports.
A No yoke (N in 5th position) PTF gauge ports

Port
6 3/4"
8 1"
A 1-1/4"
B 1-1/2"
N No yoke

Adjustment
K Knob
T T-bar

Drain
A Automatic
E Closed bottom
M Manual, spindle type
Q Manual, 1/4 turn

Bowl
C 1 litre (1 quart U.S.) No liquid indicator
M 0,5 litre (1 pint U.S.) No liquid indicator
R 0,5 litre (1 pint U.S.) With liquid indicator
U 1 litre (1 quart U.S.) With liquid indicator

Diaphragm
R Relieving
N Non relieving

Element
1 5 µm
2 25 µm
3 40 µm

Gauge
G With
N Without

Spring (Outlet pressure range) *
F 0,3 ... 4 bar (5 ... 60 psig)
L 0,4 ... 8 bar (5 ... 120 psig)
S*1) 0,7 ... 17 bar (10 ... 250 psig)

* Outlet pressure can be adjusted to pressures in excess of, and less than, those specified.
Do not use these units to control pressures outside of the specified ranges. *1) Available only with T-bar adjustment.

Technical features

Fluid: Compressed air
Maximum pressure:
17 bar (250 psig)
Operating temperature*:
–20° ... +80°C (0° ... +175°F)
* Air supply must be dry enough to avoid ice formation at temperatures below +2°C (+35°F).
Particle removal: 5 µm, 25 µm or 40 µm filter element
Air quality: Within ISO 8573-1, Class 3 and Class 5 (particulates)
Typical flow at 10 bar (150 psig) inlet pressure, 6,3 bar (90 psig) set pressure and a droop of 1 bar (15 psig) from set: 240 dm3/s (509 scfm)
1/4 turn manual drain connection: 1/8" pipe thread
Automatic drain connection: 1/8" pipe thread
Automatic drain operating conditions:
Bowl pressure required to close drain:
Greater than 0,3 bar (5 psig)
Bowl pressure required to open drain:
Less than 0,2 bar (3 psig)
Minimum air flow required to close drain:
1 dm3/s (2 scfm)
Manual operation: Depress pin inside drain outlet to drain bowl
Nominal bowl size:
0,5 litre (1 pint U.S.), 1 litre (1 quart U.S.)
Gauge ports:
1/8 PTF with PTF yoke ports
Rc1/8 with ISO Rc yoke ports
Rc1/8 with ISO G yoke ports
Materials:
Body: Aluminium
Yoke: Aluminium
Bonnet: Aluminium
Adjusting knob: Acetal resin
Optional T-bar adjusting screw: Steel
Valve: Aluminium
Bowl: Aluminium
Sight glass: Pyrex
Element: Sintered bronze or polypropylene
Elastomers: Synthetic rubber

Replacement Items

Service kit (items circled on exploded view)

Relieving	4383-300
Nonrelieving	4383-301
0.5 litre bowl liquid level lens (19 thru 27)	4380-060
1 litre bowl liquid level lens (30 thru 38)	4380-061
Filter element, 0.5 litre bowl, 5 µm (54, 55, 56)	5576-97
Filter element, 0.5 litre bowl, 25 µm (54, 55, 56)	5576-98
Filter element, 0.5 litre bowl, 40 µm (54, 55, 56)	5576-99
Filter element, 1 litre bowl, 5 µm (55)	5311-01
Filter element, 1 litre bowl, 25 µm (55)	5311-02
Filter element, 1 litre bowl, 40 µm (55)	5311-03
Automatic drain, G1/8 outlet (49)	3000-97
Automatic drain, 1/8 PTF outlet (49)	3000-10
Manual drain, spindle type (44)	684-84
Manual drain, 1/4 turn (40)	619-50
Tamper resistant cover and wire	4355-51

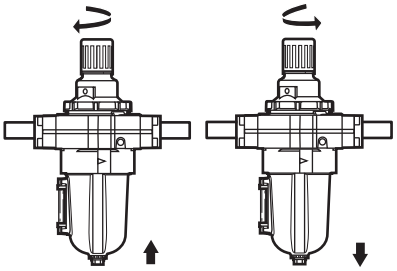

Installation

1. Install unit vertically in air line -
   - with air flow in direction of arrow on top of yoke,
   - upstream of lubricators and cycling valves,
   - as close as possible to the device being serviced.
2. Connect piping to yoke ports using pipe thread sealant on male threads only.
3. Install a pressure gauge in regulator or plug gauge ports. Gauge ports can also be used as additional outlets for regulated air.
4. Lubricate o-rings (15) with a light coat of o-ring grease, then place o-rings in grooves in body (14).
5. Place clamp ring under lugs on top of yoke.
6. Make sure arrows on yoke and regulator point in same direction, then plug regulator into yoke and tighten clamp ring hand tight.
7. Turn bowl into body until arrowhead on bowl is aligned with or to the right of the arrowhead on the body.
8. Flexible tube with 3mm (0.125") minimum I.D. can be connected to the automatic drain. Avoid restrictions in the tube.

Adjustment

1. Before applying inlet pressure to filter/regulator, turn adjustment (1 or 7) counterclockwise to remove all force on regulating spring (11).
2. Apply inlet pressure, then turn adjustment (1 or 7) clockwise to increase and counterclockwise to decrease pressure setting.
3. Always approach the desired pressure from a lower pressure. When reducing from a higher to a lower setting, first reduce to some pressure less than that desired, then bring up to the desired pressure.

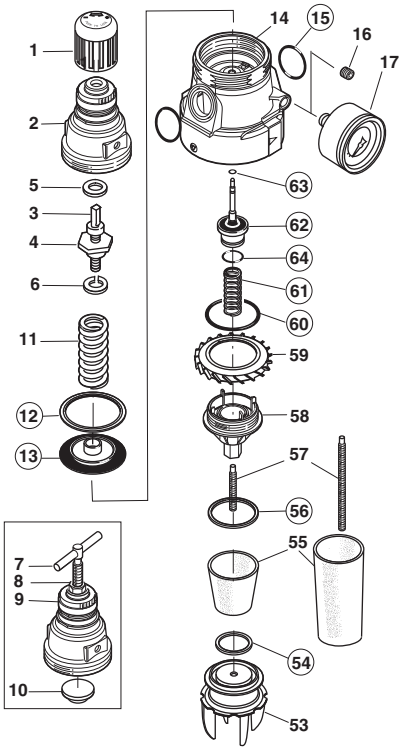

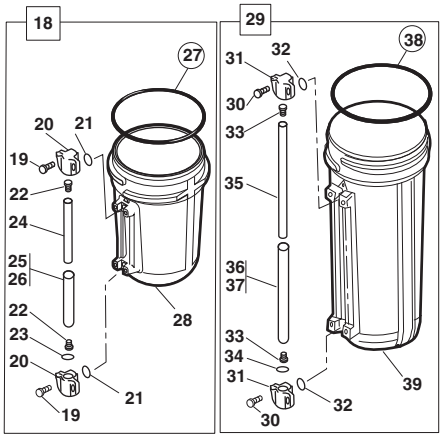

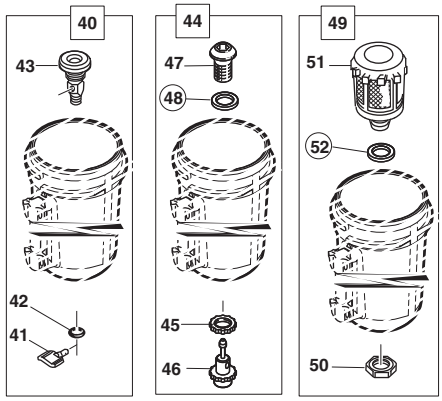

Our policy is one of continued research and development. We therefore reserve the right to amend, without notice, the specifications given in this document. (1999 - I&M8093d) © 2015 IMI International s.r.o.

Note
With non-relieving filter/regulators, make pressure reductions with some air flow in the system. If made under no flow (dead-end) conditions, the filter/regulator will trap the over-pressure in the downstream line.

4. Knob Adjustment. Push knob toward body to lock pressure setting. Pull knob away from body to release. Install tamper resistant cover and wire (see Replacement Items) to make setting tamper resistant.
5. T-bar Adjustment. Tighten lock nut (8) lock pressure setting.

Servicing

1. Open manual drain to expel accumulated liquids. Keep liquids below baffle (53).
2. Clean or replace filter element when dirty.

Diassembly

1. Shut off inlet pressure. Reduce pressure in inlet and outlet lines to zero.
2. Turn adjustment (1 or 7) fully counterclock wise.
3. Unscrew clamp ring and remove unit from yoke.
4. Disassemble in general accordance with the item numbers on exploded view. Do not remove the drains unless replacement is necessary. Remove and replace only if they malfunction.

Cleaning

1. Clean parts with warm water and soap.
2. Rinse and dry parts. Blow out internal passages in body with clean, dry compressed air. Blow air through filter element (55) from inside to outside to remove surface contaminants.
3. Inspect parts. Replace those found to be damaged.

Assembly

1. Lubricate o-rings, the portion manual drain body (43) that contacts the bowl, and the hole in the manual drain body that accommodates the stem of drain valve (41) with o-ring grease.
2. Lubricate valve stem (62), adjusting screw threads and tip (3, 7) and the recess of spring rest (10) with a light coat of good quality o-ring grease.
3. Lubricate bonnet threads (2, 9) with a small amount of anti-seize compound.
4. Assemble the unit as shown on the exploded view.
5. Assemble the liquid indicator parts (19 thru 26, 30 thru 37) to reservoir. Apply a 0.9 to 1.8 kg (2 to 4 pound) clamping force to upper and lower sight glass brackets (20, 31). Tighten screws (19, 30).
6. Torque Table

Item	Torque in Nm	(Inch-Pounds)
2, 9 (Bonnet)	62 ... 68	(550 ... 600)
16 (Pipe plug)	3,3 ... 5,5	(29 ... 49)
19, 30 (Screw)	1,8 ... 2,3	(16 ... 20)
45, 50 (Nut)	0,8 ... 1,2	(7 ... 10)
53 (Baffle)	1,1 ... 1,4	10 ... 12)

.

WARNING
These products are intended for use in industrial compressed air systems only. Do not use these products where pressures and temperatures can exceed those listed under Technical Data. Polycarbonate plastic bowls can be damaged and possibly burst if exposed to such substances as certain solvents, strong alkalies, compressor oils containing ester-based additives or synthetic oils. Fumes of these substances in contact with the polycarbonate bowl, externally or internally, can also result in damage. Clean with warm water only.
Use metal bowl in applications where a plastic bowl might be exposed to substances that are incompatible with polycarbonate.
If outlet pressure in excess of the filter/regulator pressure setting could cause downstream equipment to rupture or malfunction, install a pressure relief device downstream of the filter/regulator. The relief pressure and flow capacity of the relief device must satisfy system requirements.
The accuracy of the indication of pressure gauges can change, both during shipment (despite care in packaging) and during the service life. If a pressure gauge is to be used with these products and if inaccurate indications may be hazardous to personnel or property, the gauge should be calibrated before initial installation and at regular intervals during use. Before using these products with fluids other than air, for non industrial applications, or for life-support systems consult Norgren.

Use in potentially explosive atmospheres
Code of device according EC directive 94/9/EC ExII 2 GD c TX

- Only non-flammable gasese to be used as a medium.
- Surface temperature dependant on process fluid temperature and ambient temperature - must be below the ignition temperature of the flammable gas or dust.
- Earth unit and/or pipework to avoid electrostatic discharge.
- Precautions should be taken to prevent hazard from adiabatic compression.
- Use wet cloth for cleaning.
- Protect the unit from object falling onto it.
- Avoid contact with corrosive environment.
- For servicing the unit it is recommended to carry out this work outside of the danger zone.
- For details of ignition hazard assessment contact Norgren.

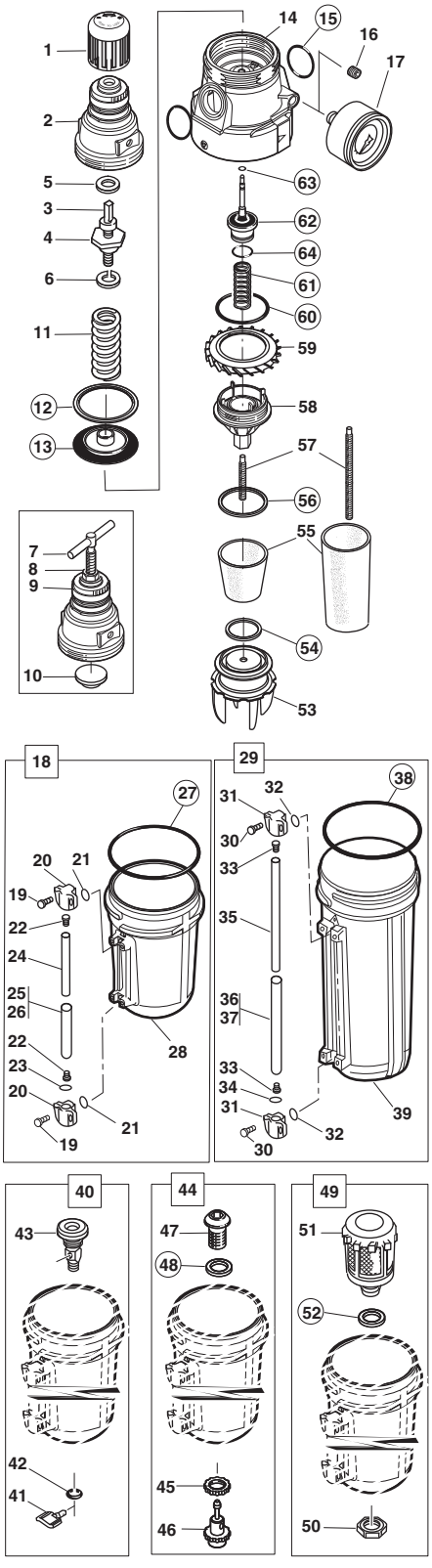

Our policy is one of continued research and development. We therefore reserve the right to amend, without notice, the specifications given in this document. (1999 - I&M8093d) © 2015 IMI International s.r.o.