FMLB-51

AC Filter Cost Optimized

Standard- or Medical-Filter



Description

- Chassis:
  Screw-on mounting, from top
- Line filter in standard and medical version, 1-stage, standard attenuation
- Quick connect terminals 6.3 x 0.8 mm
- Especially effective against symmetrical interferences in the frequency range from 10kHz up to 30MHz

Approvals

- VDE Certificate Number: 40004673
- UL File Number: E72928

Characteristics

- Designed for universal industrial applications
- High attenuation at maximum resp. asymmetric load independent from the line impedance
  Protection against interference voltage from the mains
  Possible interferences generated in the equipment are strongly attenuated
- Especially designed for industrial applications such as: Frequency Converters, Stepper Motor Drives, UPS-Systems, Inverters
- Suitable for use in equipment according to IEC/UL 60950
  Suitable for use in medical equipment according to IEC/UL 60601-1

Other versions on request

- Version with wire connection

References

Alternative: Standard version

Weblinks

pdf-datasheet, html-datasheet, General Product Information, Approvals, CE declaration of conformity, RoHS, CHINA-RoHS, REACH, e-Shop, SCHURTER-Stock-Check, Distributor-Stock-Check, Detailed request for product

Technical Data

Ratings IEC	6 - 20 A @ Ta 40 °C / 250 VAC; 50 Hz
Ratings UL/CSA	6 - 20 A @ Ta 40 °C / 125 VAC; 60 Hz
Leakage Current	standard < 0.35 mA (250 V / 60 Hz)
Dielectric Strength	1.7 kVDC between L-N 2.7 kVDC between L/N-PE Test voltage (2 sec)
Allowable Operation Temp.	-25 °C to 100 °C
Climatic Category	25/100/21 acc. to IEC 60068-1
Protection Class	Suitable for appliances with protection class I acc. to IEC 61140
Terminal	Quick connect terminals 6.3 x 0.8 mm
Material: Housing	Aluminum

Line Filter	Standard and Medical Version, IEC 60939, UL 1283, CSA C22.2 no. 8 Technical Details
MTBF	> 200'000 h acc. to MIL-HB-217 F

Dimension

Case 49

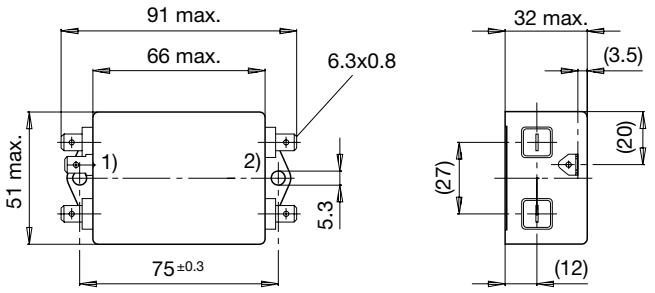

1) Line
2) Load

Diagrams

Standard version

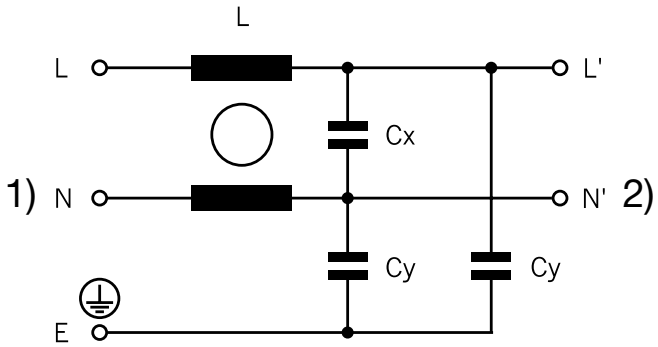

1) Line
2) Load

Medical version (M5)

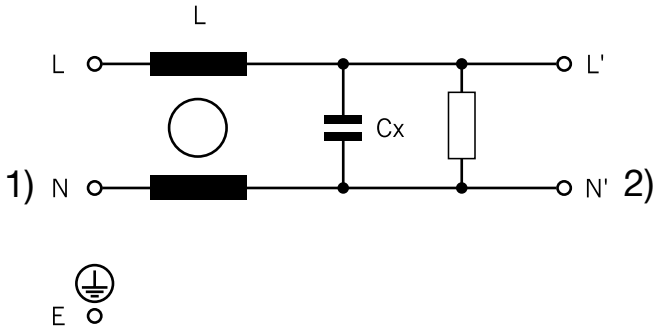

1) Line
2) Load

Medical version (M80)

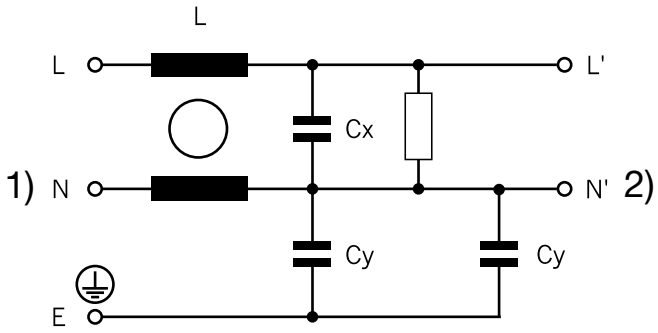

1) Line
2) Load

Attenuation Loss

- - - - differential mode _____ common mode

Standard version

6 A

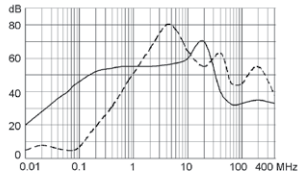

10 A

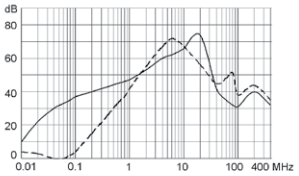

16 A

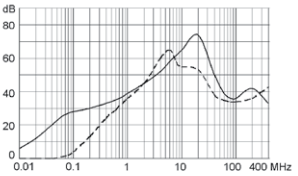

20 A

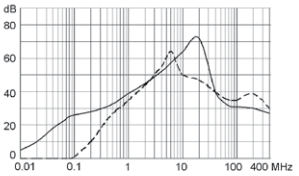

Medical version (M5)

6 A

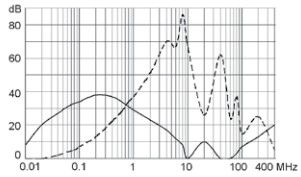

10 A

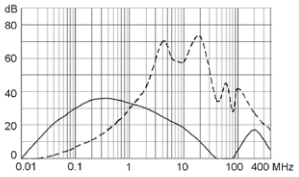

16 A

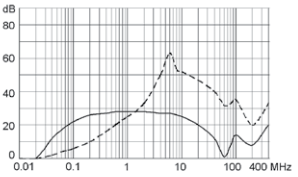

20 A

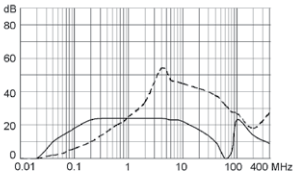

Medical version (M80)

6 A

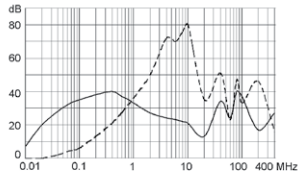

10 A

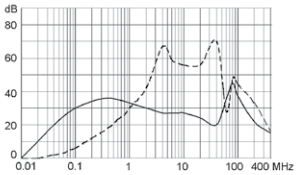

16 A

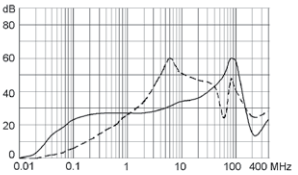

20 A

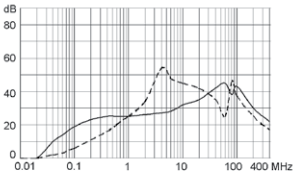

All Variants

Rated Current [A]	Filter-Type	L [mH]	Cx (X2) [µF]	Cy (Y2) [nF]	Weight [g]	Housing	Order Number	
6	Standard Version	2 x 14	0.1	3.3	212 g	49	5500.2035	
10	Standard Version	2 x 5	0.1	3.3	212 g	49	5500.2036	▮
16	Standard Version	2 x 2	0.1	3.3	208 g	49	5500.2037	▮
20	Standard Version	2 x 1.5	0.1	3.3	218 g	49	5500.2038	▮
6	Medical Version (M5)	2 x 14	0.1	-	212 g	49	5500.2082	▮
10	Medical Version (M5)	2 x 5	0.1	-	212 g	49	5500.2083	
16	Medical Version (M5)	2 x 2	0.1	-	208 g	49	5500.2084	
20	Medical Version (M5)	2 x 1.5	0.1	-	218 g	49	5500.2085	
6	Medical Version (M80)	2 x 14	0.1	0.47	212 g	49	5500.2094	
10	Medical Version (M80)	2 x 5	0.1	0.47	212 g	49	5500.2095	
16	Medical Version (M80)	2 x 2	0.1	0.47	208 g	49	5500.2096	
20	Medical Version (M80)	2 x 1.5	0.1	0.47	218 g	49	5500.2097	

▮ Most Popular.

Availability for all products can be searched real-time:http://www.schurter.com/en/Stock-Check/Stock-Check-SCHURTER

Packaging unit 10 Pcs

05.05.2015

The specifications, descriptions and illustrations indicated in this document are based on current information. All content is subject to modifications and amendments. Information furnished is believed to be accurate and reliable. However, users should independently evaluate the suitability and test each product selected for their own applications.