6308-2Z

SKF Explorer

Dimensions

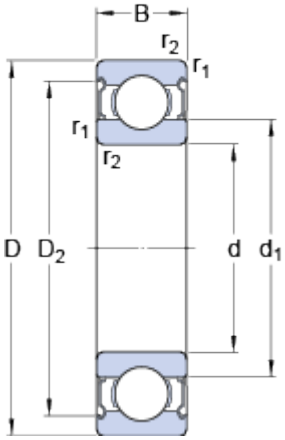

d		40	mm
D		90	mm
B		23	mm
d_1		56.11	mm
D_2		77.7	mm
$r_{1,2}$	min.	1.5	mm

Abutment dimensions

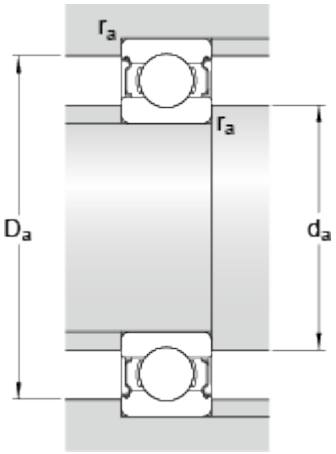

d_a	min.	49	mm
d_a	max.	56	mm
D_a	max.	81	mm
r_a	max.	1.5	mm

Calculation data

Basic dynamic load rating	C	42.3	kN
Basic static load rating	C_0	24	kN
Fatigue load limit	P_u	1	kN
Reference speed		17000	r/min
Limiting speed		8500	r/min
Calculation factor	k_r	0.03	
Calculation factor	f_0	13.2	

Mass

Mass bearing	0.654	kg