Product data sheet
Characteristics

XMLR100M2P05
Pressure sensors XMLR 100bar - G 1/4 - 24VDC - 2xPNP - M12



Main

Range of product	OsiSense XM
Product or component type	Electronic pressure sensors
Pressure switch type of operation	Pressure switch with 2 switching outputs
Device short name	XMLR
Pressure sensor size	100 bar 1450 psi 10 MPa
Maximum permissible accidental pressure	300 bar 4350 psi 30 MPa
Destruction pressure	600 bar 8700 psi 60 MPa
Controlled fluid	Refrigeration fluid (-20...80 °C) Hydraulic oil (-20...80 °C) Air (-20...80 °C) Fresh water (0...80 °C)
Fluid connection type	G 1/4 (female) conforming to DIN 3852-Y
[Us] rated supply voltage	24 V DC SELV, voltage limits: 17...33 V

Complementary

Current consumption	<= 50 mA
Electrical connection	4 pins M12 male connector
Type of output signal	Discrete
Discrete output type	Solid state PNP, 2 NO/NC programmable
Maximum switching current	250 mA
Voltage drop	<= 2 V
Adjustable range of switching point on rising pressure	8...100 bar 116...1450 psi 0.8...10 MPa
Adjustable range of switching point on falling pressure	5...97 bar 72.5...1407 psi 0.5...9.7 MPa
Minimum differential travel	3 bar 43.5 psi 0.3 MPa
Materials in contact with fluid	316L stainless steel
Front material	Polyester
Housing material	Polyacrylamide 316L stainless steel
Operating position	Any position, but disposals can falsified the measurement in case of upside down mounting
Protection type	Overload protection Overvoltage protection Reverse polarity Short-circuit protection
Response time on output	<= 5 ms for discrete output
Switching output time delay	0...50 s in steps of 1 second
Display type	4 digits 7 segments
Local signalling	2 LEDs yellow for light ON when switch is actuated

The information provided in this documentation contains general descriptions and/or technical characteristics of the performance of the products contained herein.
This documentation is not intended as a substitute for and is not to be used for determining suitability or reliability of these products for specific user applications.
It is the duty of any such user or integrator to perform the appropriate and complete risk analysis, evaluation and testing of the products with respect to the relevant specific application or use thereof.
Neither Schneider Electric Industries SAS nor any of its affiliates or subsidiaries shall be responsible or liable for misuse of the information contained herein.

Display response time type	Slow 600 ms Normal 200 ms Fast 50 ms
Delay first up	<= 300 ms
Overall accuracy	<= 1 % of the measuring range
Measurement accuracy on switching output	<= 0.6 % of the measuring range
Repeat accuracy	<= 0.2 % of the measuring range
Drift of the sensitivity	+/- 0.03 % of measuring range/°C
Drift of the zero point	+/- 0.1 % of measuring range/°C
Display accuracy	<= 1 % of the measuring range
Mechanical durability	>= 10000000 cycles
Depth	42 mm
Height	88 mm
Width	41 mm
Product weight	0.186 kg
[Uimp] rated impulse withstand voltage	0.5 kV DC
Electromagnetic compatibility	Electrostatic discharge immunity test - test level 8 kV air, 4 kV contact conforming to EN/IEC 61000-4-2 Electrical fast transient/burst immunity test - test level 2 kV conforming to EN/IEC 61000-4-4 Surge immunity test - test level 1 kV conforming to EN/IEC 61000-4-5 Immunity to conducted RF disturbances - test level 10 V (0.15...80 MHz) conforming to EN/IEC 61000-4-6 Susceptibility to electromagnetic fields - test level 10 V/m (80...2000 MHz) conforming to EN/IEC 61000-4-3

Environment

Marking	CE
Product certifications	CULus EAC
Standards	UL 61010-1 EN/IEC 61326-2-3
Ambient air temperature for operation	-20...80 °C
Ambient air temperature for storage	-40...80 °C
IP degree of protection	IP67 conforming to EN/IEC 60529 IP65 conforming to EN/IEC 60529
Vibration resistance	20 gn (f = 10...2000 Hz) conforming to EN/IEC 60068-2-6
Shock resistance	50 gn conforming to EN/IEC 60068-2-27

Offer Sustainability

Sustainable offer status	Not Green Premium product
RoHS (date code: YYWW)	Compliant - since 1351 - Schneider Electric declaration of conformity
REACh	Reference not containing SVHC above the threshold

Dimensions

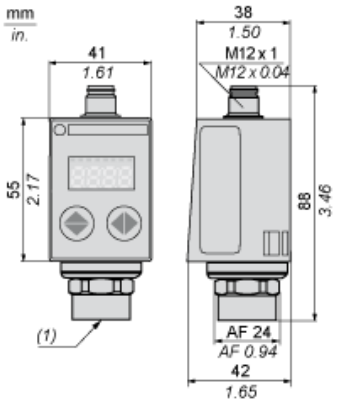

(1) Fluid entry: G 1/4 A female

Connections and Schema

Connector Wiring

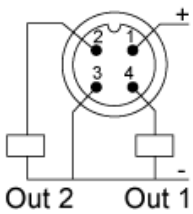

Switching Output Description. Hysteresis Mode

The hysteresis switching mode is typically used for the “pumping and/or emptying applications”.

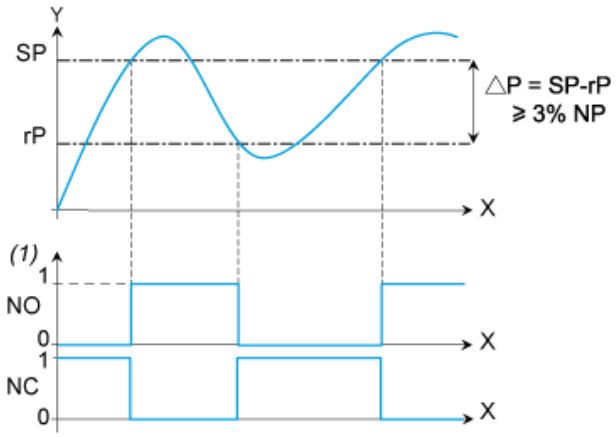

X : Time
Y : Pressure
(1) Output
NP : Nominal Pressure
SP : Set point (adjustable from 8 % to 100 % NP)
rP : Reset point (adjustable from 5 % to 97 % NP)

Switching Output Description. Window Mode

The window switching mode is typically used for the “pressure regulation applications”

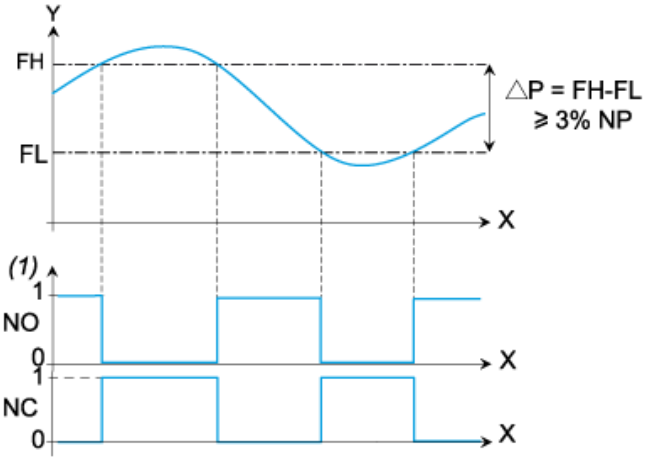

X : Time
Y : Pressure
(1) Output
NP : Nominal pressure
FH : High switching point (adjustable from 8 % to 100 % NP)
FL : Low switching point (adjustable from 5 % to 97 % NP)

Switching Output Description. Time Delay

The Time Delay is typically used to filter out the fast pressure transients.
The output only switches after a time “dS” and “dr” adjustable from 0 to 50 seconds.

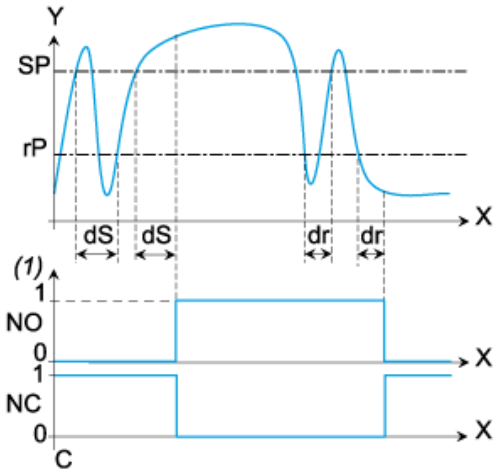

X : Time
Y : Pressure
(1) Output
SP : Set point
rP : Reset point
dS : Time delay on the set point
dr : Time delay on the reset point