

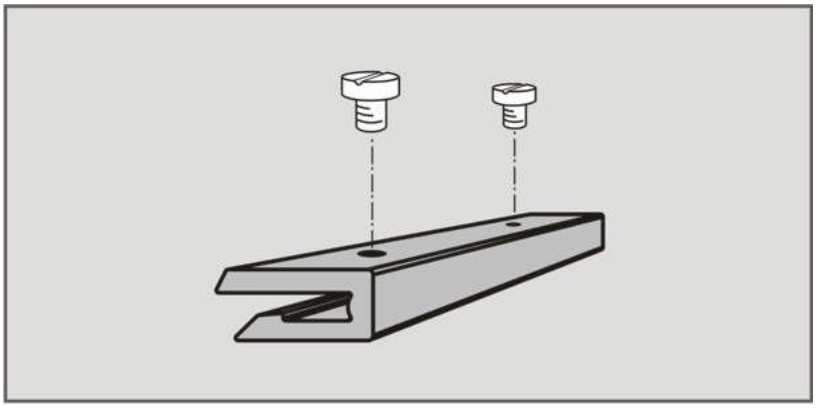

XLAG 5

Name	Plastic screw
Description	DIN 85 M5x6 PA6.6
Product Group(s)	X65
Configurable	No
Pack Size	50
Class	A
Weight	0.001
Unit	PCE
Catalogue	
Chain guide	
Spare parts	