KIMO INSTRUMENTS

DATA SHEET



CP 210-R

Temperature and differential pressure transmitter

Range from ±100 to ±10 000 Pa
(according to model, see "Part number")

Two 4-wire analogue output
0-5/10 V or 0/4-20 mA

2 relay outputs

ABS V0 housing, IP65,
with or without display

Features

- Input Pt100 on terminal block
  for temperature measurement, range from -100 to +400°C (probes as option)
- Configurable intermediate ranges
- Power supply 24 Vdc/Vac or 100-240 Vac
- Trend indicator
- "¼ turn" system mounting with wall-mount plate
- Solenoid valve for auto-calibration
  (only on CP211 and CP212 models)

Part number

CP 21 - [ ] - [ ] - [ ] - R

- Measuring range
  1: -100/+100 Pa
  2: -1000/+1000 Pa
  3: -10 000/+10 000 Pa
- Power Supply / Output
  B: 24 Vac/Vdc
  H: 100-240 Vac
- Display
  O: with display
  N: without display
- Relay outputs

Example: CP 211 – HO – R
Pressure transmitter -100/+100 Pa measuring range, with 100-240 Vac power supply, with display and relay outputs.

Technical specifications

Parameters	Accuracies*	Response time	Resolution	Tolerated overpressure
Pressure	CP211/212: ±0.5% of reading ±2 Pa CP213: ±0.5% of reading ±10 Pa	1/e (63%) 0.3 s	CP211/212: 1 Pa; 0.1 mmH_2O; 0.01 mbar; 0.01 inWG; 0.01 mmHG; 0.1 daPa; 0.001 kPa; 0.01 hPa CP213: 1 Pa; 0.1 mmH_2O; 0.01 mbar; 0.01 inWG; 0.01 mmHG; 0.1 daPa; 0.01 kPa; 0.01 hPa	CP211/212: 21 000 Pa CP213: 69 000 Pa
Pt100 temperature	CP211/212/213 (Pt100 temperature): ±0.5% of reading ±0.5°C	1/e (63%) 0.3 s	0.1 °C ; 0.1 °F	-

*All the accuracies indicated in this technical datasheet were stated in laboratory conditions, and can be guaranteed for measurements carried out in the same conditions, or carried out with calibration compensation.

General features

Power supply	24 Vac / Vdc ±10% 100-240 Vac, 50-60 Hz Warning: risk of electric shock
Output	2 x 4-20 mA or 2 x 0-20 mA or 2 x 0-5 V or 2 x 0-10 V (4 wires) Common mode voltage <30 VAC Maximum load: 500 Ohms (0/4-20 mA) Minimum load: 1 K Ohms (0-5/10 V)
Relay outputs	2 changeover relays NO: 5A / NC: 3A / 240 Vac
Galvanic isolation	Inputs and outputs (100-240 Vac models) Device fully protected by DOUBLE ISOLATION or REINFORCED ISOLATION Outputs (24 Vac/Vdc models)
Consumption	CP210-B: 6 VA / CP210-H: 8 VA
Electrical connection	Screw terminal block for cables 2.5 mm². Carried out according to the code of good practice
PC communication	USB-Mini Din cable
Environment	Air and neutral gases
Autozero	Manual by push-button; Automatic by solenoid valve (only CP211/CP212)
Type of fluid	Air and neutral gases
Conditions of use (°C/%RH/m)	From -10 to +50°C. In non-condensing condition. From 0 to 2000 m.
Storage temperature	From -10 to +70°C
Security	Protection class II; Pollution degree 2; Overvoltage category 2 (OVCII)
European directives	2014/30/EU EMC; 2014/35/EU Low Voltage; 2011/65/EU RoHS II; 2012/19/EU WEEE

Housing features

Matierial	ABS V0 according to UL94
Protection	IP65
Display	75 x 40 mm, LCD 19 digits 2 lines Height of digits: Values: 10 mm; Units: 5 mm
Connection	Ribbed Ø6.2 mm (CP211/212/213)
Pass-through	For cables Ø6 mm maximum
Cable gland	For cables Ø8 mm maximum
Weight	340 g

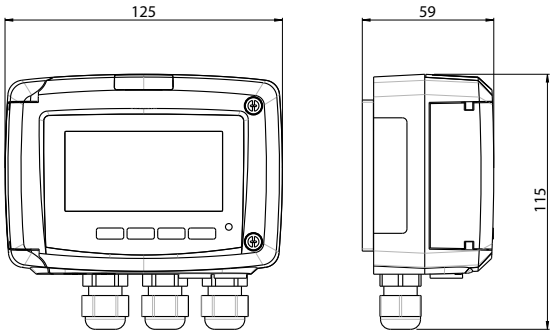

All dimensions are in millimeters.

Configurable intermediate or center zero ranges

Transmitters	Pressure range	Air velocity range*
CP211	-100/+100 Pa	From 3 to 10 m/s
CP212	-1000/+1000 Pa	From 3 to 30 m/s
CP213	-10 000/+10 000 Pa	From 3 to 85 m/s

*These air velocity ranges are given for information, based on a L type Pitot tube and do not take into account temperature compensation.

Airflow and Air Velocity functions

Class 210 transmitters have 2 analogue outputs that correspond to both displayed parameters. It is possible to activate one or two outputs and select for each output between pressure, air velocity and air flow (functions as option).

Linked to a differential pressure device (Debimo blade, Pitot tube, orifice plate, …), they can be equipped as option with the SQR 3 function (square root function) allowing to calculate the air velocity and/or air flow in a duct from a differential pressure.

Functions / Features	Measuring ranges	Units and resolutions
Air velocity*	From 3 to 85 m/s (according to model)	0.1 m/s 0.1 fpm
Airflow*	From 0 to 99 999 dam³/h (according to air velocity and section)	1 m³/h – 0.1 m³/s – 1 dam³/h 0.1 l/s – 1 cfm

*Differential pressure device (Pitot tube, Debimo...) as option

- **Air Velocity calculation :** $V = C_M \sqrt{\frac{2\Delta P}{\rho}}$

$$\rho = \frac{P_o}{287.1 \times (\Theta + 273.15)}$$

- **Air flow calculation:** air flow (m3/h) = air velocity (m/s) x surface (m²) x 3600
  Surface: setting of duct type (rectangular or circular) and duct size (mm or inch).

With:
C_M: differential pressure device coefficient
- Pitot tube type L: $C_M = 1.0015$
- Pitot tube type S: $C_M = 0.84$
- Debimo blade: $C_M = 0.8165$

Θ: given temperature (°C)
P_0: given atmospheric pressure (Pa)

Integration of pressure measurement

The pressure measurement element is very sensitive and reacts to pressure changes. When making measurements in unstable air movement conditions, the pressure measurement may fluctuate. The integration coefficient (from 0 to 9) makes an average of the measurements and then helps avoid any excessive variations; it guarantees a stable measurement.

Connections

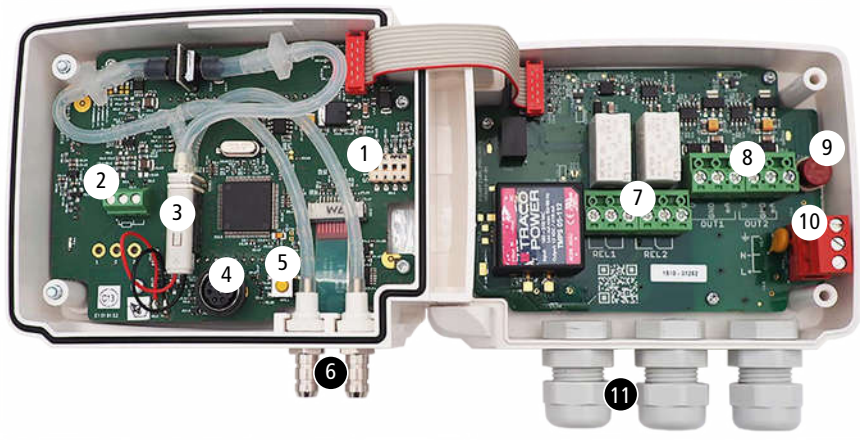

1. DIP switch (d)
2. Pt100 terminal block
3. Solenoid valve (only on CP211/212)
4. LCC-S software connection
5. Autozero
6. Pressure connections
7. Relays
8. Analogue outputs (a)
9. F3.20* fuse
10. Power supply terminal block (c)
11. Cable glands

Power supply type (b) specified on the label on the side of the transmitter

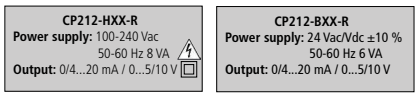

100-240 Vac | 24 Vac/Vdc

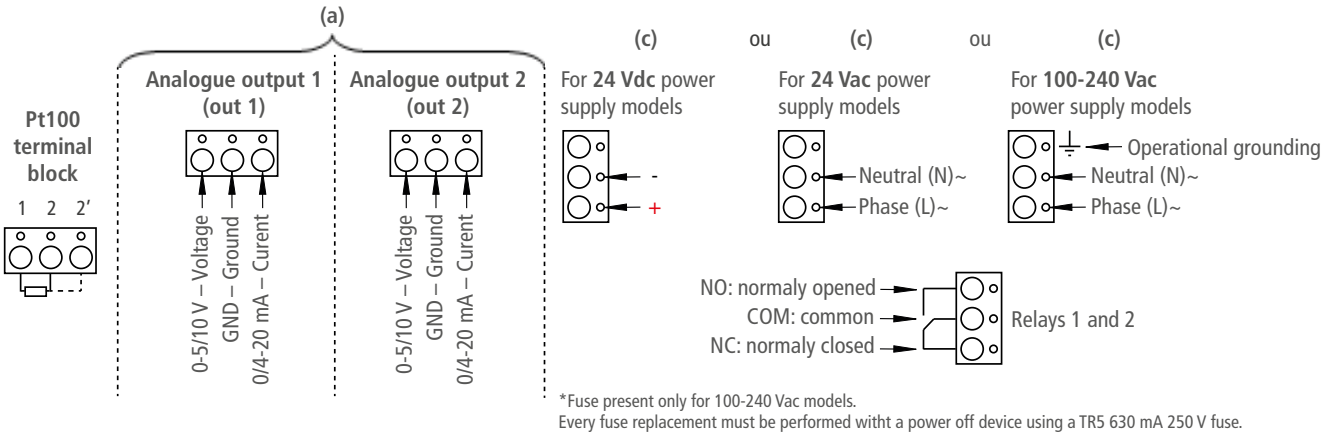

*Fuse present only for 100-240 Vac models.
Every fuse replacement must be performed witht a power off device using a TR5 630 mA 250 V fuse.

Electrical connections as per NFC15-100 standard

This connection must be made by a formed and qualified technician. To make the connection, the transmitter must not be energized. Before making the connection, you must first check the power supply indicated on the transmitter board (see (b) on "Connections" part). The presence of a switch and a circuit breaker upstream the device is compulsory

- For transmitters with 24 Vdc power supply:

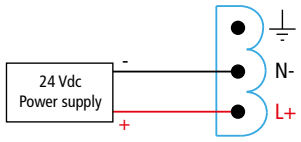

- For transmitters with 24 Vac power supply:

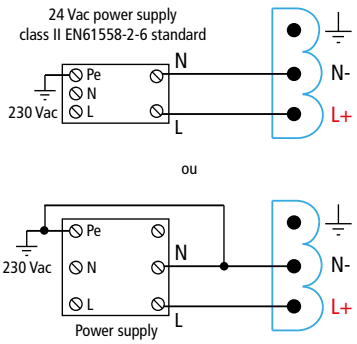

- For transmitters with 100-240 Vac power supply:

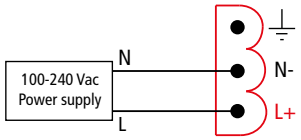

The selection of the output signal in voltage (0-10 V or 0-5 V) or in current (4-20 mA or 0-20 mA) is made via the DIP switch (d) of the electronic board of the transmitter: put the on-of switches as shown in the table below:

Configurations	4-20 mA	0-10 V	0-5 V	0-20 mA
Combinations				

- Connection of the output in current 4-20 mA:

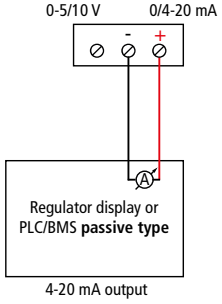

4-20 mA output

- Connection of output in voltage 0-10 V:

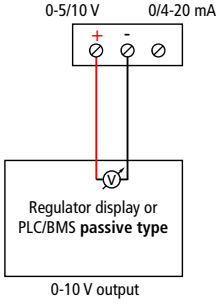

0-10 V output

On 100-240 Vac models, if a fuse protection is used for the power line, it is imperative to use delayed-action fuses in order to absorb the surge of current when first turned on the transmitter.

Autozero

Auto-calibration

CP210 transmitters have a temperature compensation of the gain from 0 to 50°C and an auto-calibration process that guarantees over the time an excellent stability and a perfect reliability of the measurement on low and high ranges.
Auto-calibration principle: the microprocessor of the transmitter drives a solenoid valve that compensates the possible drifts on the sensitive element over the time. The compensation is performed by the permanent adjustment of the zero. So the measurement of the differential pressure is then independent from the environmental conditions of the transmitter.
Advantage: no drift
Frequency of auto-calibration: resetable or from 1 to 60 minutes

Autozero

To perform an autozero, unplug the 2 pressure connections tubes and press the **"Autozero"** key. On CP211 and CP 212 transmitters, it is not necessary to unplug the 2 pressure connection tubes. When an autozero has been performed, "On" green light turns off then turns on, and on transmitters equipped with a display, **"autoZ"** is displayed.

Configuration of the transmitters

It is possible on the class 210 to configure all the parameters managed by the transmitter : units, measuring ranges, outputs, channels, calculation functions, etc, via different methods:

- **Keypad** for models with display : a code-locking system allows to secure the installation (See class 210 user manual).
- **Software** (optional) on all models. Simple user-friendly configuration. See LCC-SD user manual.

Configurable analogue output:

Range with central zero (-50/0/+50 Pa), with offset zero (-300/0/+70 Pa) or standard range (0/+100 Pa), it is possible to configure your own intermediate ranges.
Caution: the minimum difference between the high range and the low range is 20.

Configure the range according to your needs: outputs are automatically adjusted to the new measuring range

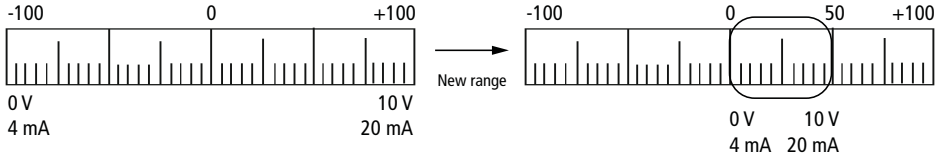

Mounting

To mount the transmitter, mount the ABS plate on the wall (drilling: Ø6 mm, screws and pins are supplied). Insert the transmitter on the fixing plate (see A on the drawing beside). Rotate the housing in clockwise direction until you hear a "click" which confirms that the transmitter is correctly installed.

Once the transmitter is installed and powered up, please make an autozero to guarantee the correct working of the transmitter in any position.

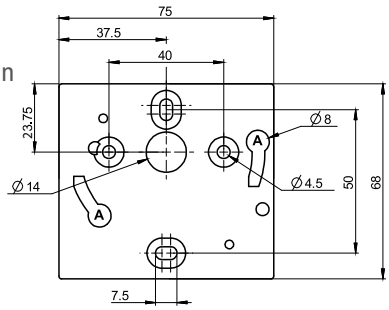

Les dimensions sont exprimées en millimètres.

Maintenance

Please avoid any aggressive solvent. Please protect the transmitter and its probes from any cleaning product containing formalin, that may be used for cleaning rooms or ducts.

Calibration

Outputs diagnostic: With this function, you can check with a multimeter (or on a regulator / display, or a PLC / BMS) if the transmitter outputs work properly. The transmitter generates a voltage of 0 V, 5 V and 10 V or a current of 4 mA, 12 mA and 20 mA

Certificate: Class 210 transmitters are supplied with adjusting certificates. Calibration certificates are available as an option.

Precautions for use

Please always use the device in accordance with its intended use and within parameters described in the technical features in order not to compromise the protection ensured by the device.

Options et accessoires

Nom	Référence
Configuration software with USB cable	LCC-S
SQR/3 function (square root for the measurement of air velocity and air flow)	-
Calibration certificate	-
Connection tubes	-
Connection fittings	-
Through-connection	-
Straight connections	-
Spherical coupling nut	-
Pt100 temperature probes	See specific data sheet

Only the accessories supplied with the device must be used.

FTang – CP 210 R – 02/04/19 – RCS (24) Périgueux 349 282 095 Non-contractual document – We reserve the right to modify the characteristics of our products without prior notice.