BACnet/IP & MS/TP Client to ASCII IP & ASCII Serial Server Application



BACnet/IP & MS/TP to ASCII IP & Serial - 1200 points

Item number: IN7004851K20000

Integrate any BACnet MS/TP or BACnet/IP server device with an ASCII BMS or any ASCII IP or ASCII serial controller. This integration aims to make BACnet objects, data, and resources accessible from an ASCII-based control system or device as if they were a part of the ASCII system and vice versa.

Features and benefits

- **Support for both BACnet/IP and BACnet MS/TP**
  The gateway supports both BACnet/IP and BACnet MS/TP protocols.
- **Easy integration with Intesis MAPS**
  The integration process is quickly and easily managed using the Intesis MAPS configuration tool.
- **Configuration tool and gateway automatic updates**
  Both the Intesis MAPS configuration tool and the gateway's firmware can receive automatic updates.
- **ASCII bus automatic write request on value change**
  When an ASCII value changes, the gateway automatically sends a write request to the ASCII bus.
- **BACnet devices scan option with BACnet Explorer**
  It is possible to scan the BACnet network to discover devices using the BACnet Explorer feature.
- **Commissioning-friendly approach with Intesis MAPS**
  Templates can be imported and reused as often as needed, significantly reducing commissioning time.
- **ASCII Serial (232/485) and ASCII IP support**
  The gateway fully supports both ASCII IP and ASCII Serial (232/485).
- **Personalized ASCII strings use**
  It is possible to use personalized ASCII strings on this gateway.

BACnet/IP & MS/TP Client to ASCII IP & ASCII Serial Server Application



General

Net Width (mm)	88
Net Height (mm)	90
Net Depth (mm)	58
Net Weight (g)	194
Packed Width (mm)	127
Packed Height (mm)	86
Packed Depth (mm)	140
Packed Weight (g)	356
Operating Temperature °C Min	-10
Operating Temperature °C Max	60
Storage Temperature °C Min	-30
Storage Temperature °C Max	60
Power Consumption (W)	1.7
Input Voltage (V)	For DC: 9 .. 36 VDC, Max: 260 mA, 2.4 W For AC: 24 VAC ±10 %, 50-60 Hz, Max: 100 mA, 2.4 W Recommended voltage: 24 VDC, Max: 100 mA
Power Connector	3-pole
Configuration	Intesis MAPS
Capacity	Up to 1200 points.
Installation Conditions	This gateway is designed to be mounted inside an enclosure. If the unit is mounted outside an enclosure, precautions should always be taken to prevent electrostatic discharge to the unit. When working inside an enclosure (e.g., making adjustments, setting switches, etc.), typical anti-static precautions should always be followed before touching the unit.
Content of Delivery	Intesis Gateway, Installation Manual, USB Configuration cable.

BACnet/IP & MS/TP Client to ASCII IP & ASCII Serial Server Application



General

Not Included (in delivery)	Power supply not included.
Mounting	DIN rail mount (bracket included), Wall mount
Housing Materials	Plastic
Warranty (years)	3 years
Packaging Material	Cardboard

Identification and Status

Product ID	IN7004851K20000_ASCII_BAC
Country of Origin	Spain
HS Code	8517620000
Export Control Classification Number (ECCN)	EAR99

Physical Features

Connectors / Input / Output	Power supply, two EIA-485 ports, Ethernet, Console port USB Mini-B type, USB storage, EIA-232.
LED Indicators	Gateway and communication status.
Push Buttons	Factory reset.
DIP & Rotary Switches	EIA-485 serial port configuration.
Battery Description	Manganese Dioxide Lithium button battery.

Certifications and Standards

ETIM Classification	EC001604
WEEE Category	IT and telecommunications equipment

BACnet/IP & MS/TP Client to ASCII IP & ASCII Serial Server Application

Use Case

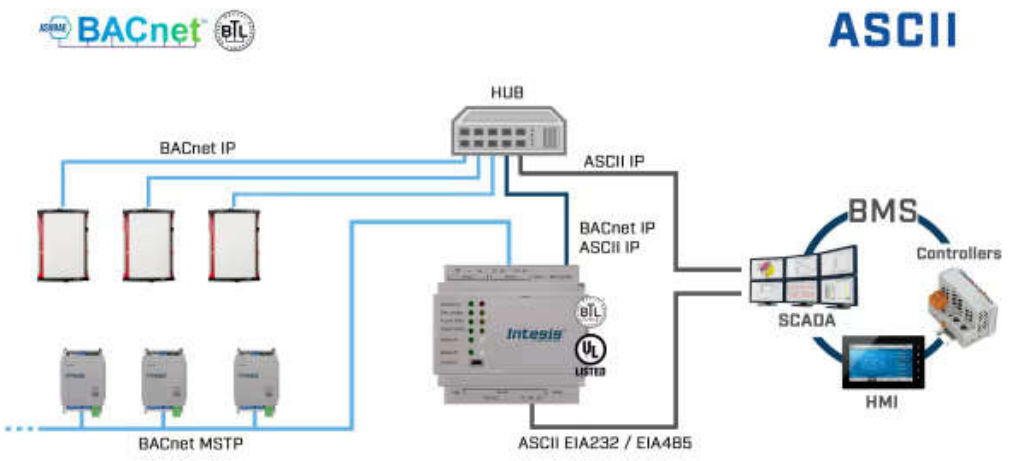

Integration example.



Use Intesis MAPS to change the protocol: BACnet, Modbus, KNX, or Home Automation