Brand of NTN Group

Technical data

UCF208-24

Bearing units



Grey cast housing, radial insert ball bearing with socket set screws,seal with slinger

KIT CONTENT

UC208-24G2, F208

VISUAL (S)

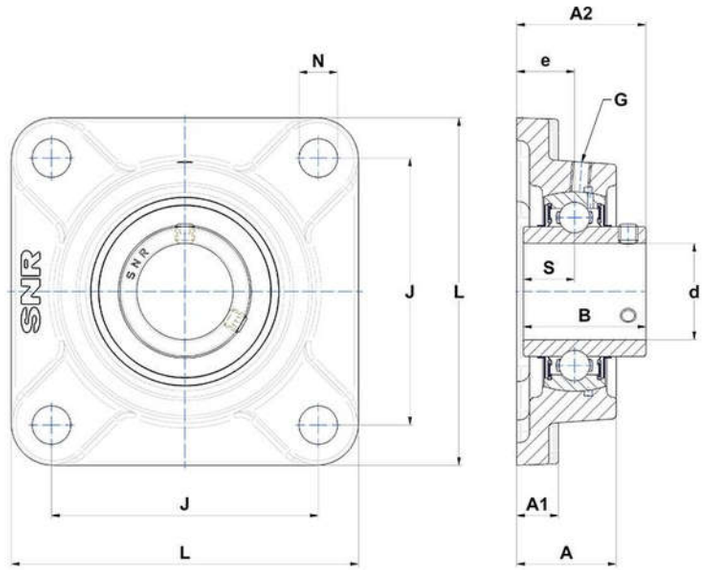

PRODUCT DEFINITION

Brand	SNR
A - Housing height	36 mm
A1 - Housing foot height / flange height	15 mm
A2 - Total height from mounting surface	51,2 mm
B - Width of Inner Ring	49,2 mm
d - Shaft diameter	38,1 mm

PRODUCT DEFINITION	
e - Distance mounting surface to bearing center	21 mm
G - Grease fitting	M6x1
J - Mounting holes distance	102 mm
L - Housing width / diameter	130 mm
N - Mounting hole dimension	16 mm
S - Distance front side/bearing centre	19 mm

PRODUCT PERFORMANCE	
C - Dynamic load rating	29600000 mN
C0 - Static load rating	18200000 mN
Operating temperature min.	253,15 °K
Operating temperature max.	373,15 °K

OTHER FEATURES	
Mass	1,93 kg
Recommended tightening torque for set screw	8 N-m