efector140

KT5102

KTRBFNUKBPKG/0.3M/DYN/M22

Touch sensors

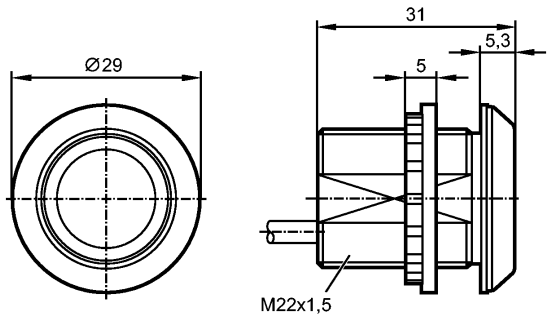

Made in Germany

CE

Product characteristics		
Touch sensor		
Plastic housing		
Cable with connector		
Touch sensor with dynamic evaluation principle		
Diffuser to be ordered separately		
Electrical data		
Electrical design		DC PNP
Operating voltage	[V]	24 DC (12...30 DC)
Current consumption	[mA]	45
Outputs		
Output function		normally open
Current rating	[mA]	500
Short-circuit protection		yes
Overload protection		yes
Reaction times		
Duration of output signal [ms]		300
Environment		
Ambient temperature	[°C]	-40...85
Protection		IP 65 / IP 67 / IP 69K; on the front
Tests / approvals		
MTTF	[Years]	352
Mechanical data		
Housing materials		PA66 GF30 black
Weight	[kg]	0.056
Displays / operating elements		
Output status indication	LED	Red
Operation	LED	green
Electrical connection		
Connection		PUR cable / 0.3 m; with M12 connector

Wiring

KT5102

KTRBFNUKBPKG/0.3M/DYN/M22

Touch sensors

1: brown
3: blue
4: black



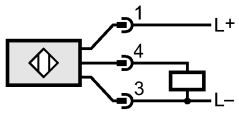

Accessories

Accessories (optional)	Diffuser

Remarks

Pack quantity	[piece]	1