PN7560
PN-600-SEG14-QFRKG/US/ /V

Pressure sensors

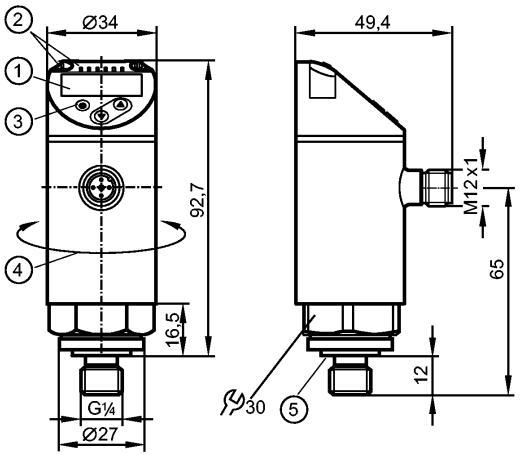

1: 4-digit alphanumeric display / alternating indication of red and green
2: LEDs (display unit / switching status)
3: Programming button
4: Upper part of the housing can be rotated by 345°
5: sealing FKM / DIN 3869

Product characteristics

Electronic pressure monitor
M12 connector
Function programmable
Measuring element: metal thin film cell
Process connection: G ¼ A / M5 I
2 outputs OUT1 = switching output OUT2 = switching output
4-digit alphanumeric display / alternating indication of red and green
Measuring range: 0...600 bar / 0...8700 psi / 0...60 MPa

Application				
Application		Type of pressure: relative pressure liquids and gases of the fluid group 2 according to Article 9 of the Pressure Equipment Directive (PED)		
Pressure rating		800 bar	11580 psi	80 MPa
Bursting pressure min.		2500 bar	36250 psi	250 MPa
Medium temperature	[°C]	-25...80		
Electrical data				
Electrical design		DC PNP/NPN		
Operating voltage	[V]	18...30 DC [1])		
Current consumption	[mA]	< 35		
Insulation resistance	[MΩ]	> 100 (500 V DC)		
Protection class		III		
Reverse polarity protection		yes		
Outputs				
Output		2 outputs OUT1 = switching output OUT2 = switching output		
Output function		2 x normally open / closed programmable		
Current rating	[mA]	150; 200 (...60 °C); 250 (...40 °C)		
Voltage drop	[V]	< 2.5		
Short-circuit protection		pulsed		
Overload protection		yes		

PN7560 - Electronic pressure monitor - eclass: 27201302 / 27-20-13-02

Switching frequency	[Hz]	≤ 170		
Measuring / setting range				
Measuring range		0...600 bar	0...8700 psi	0...60 MPa
Setting range				
Set point, SP		4...600 bar	40...8700 psi	0.4...60 MPa
Reset point, rP		2...598 bar	20...8680 psi	0.2...59.8 MPa
in steps of		2 bar	20 psi	0.2 MPa
Accuracy / deviations				
Accuracy / deviations (in % of the span)				
Switch point accuracy		< ± 0.5		
Characteristics deviation *)		< ± 0.25 (BFSL) / < ± 0.5 (LS)		
Hysteresis		< ± 0.25		
Repeatability **)		< ± 0.1		
Long-term stability ***)		< ± 0.05		
Temperature coefficients (TEMPCO) in the temperature range -25...80° C (in % of the span per 10 K)				
Greatest TEMPCO of the zero point		0.2		
Greatest TEMPCO of the span		0.2		
Reaction times				
Power-on delay time	[s]	< 0.3		
Min. response time switching output	[ms]	< 3		
Delay time programmable dS, dr	[s]	0...50		
Integrated watchdog		yes		
Software / programming				
Programming options		hysteresis / window function; NO / NC; output polarity; on delay, off delay; damping; display unit		
Interfaces				
IO-Link device				
Transfer type		COM2 (38.4 kBaud)		
IO-Link revision		1.1		
SDCI standard		IEC 61131-9		
IO-Link device ID		398 d / 00 01 8e h		
Profiles		Smart Sensor: Process Data Variable; Device Identification, Device Diagnosis		
SIO mode		yes		
Required master port class		A		
Process data analogue		1		
Process data binary		2		
Min. process cycle time	[ms]	2.3		
Environment				
Ambient temperature	[°C]	-25...80		
Storage temperature	[°C]	-40...100		
Protection		IP 65 / IP 67		
Tests / approvals				
Pressure equipment directive		Article 3, section 3 - sound engineering practice		
EMC		DIN EN 61000-6-2 DIN EN 61000-6-3		
Shock resistance		DIN EN 60068-2-27	50 g (11 ms)	
Vibration resistance		DIN EN 60068-2-6	20 g (10...2000 Hz)	
MTTF	[Years]	210		
UL approval number		J003		
Mechanical data				
Process connection		G ¼ A / M5 I		
Materials (wetted parts)		1.4542		
Housing materials		1.4542; 1.4404; PBT+PC-GF 30; PBT-GF 20; PC		
Switching cycles min.		100 million		
Tightening torque	[Nm]	25...35 (recommended tightening torque²)		
Weight	[kg]	0.258		

PN7560 - Electronic pressure monitor - eclass: 27201302 / 27-20-13-02

Displays / operating elements	
Display	Display unit 3 x LED green (bar, psi, MPa) Switching status 2 x LED yellow 4-digit alphanumeric display / alternating indication Measured values of red and green
Electrical connection	
Connection	M12 connector; Gold-plated contacts
Wiring	
Core colours BK black BN brown BU blue WH white	 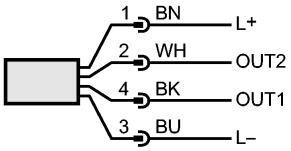
	OUT1: switching output or IO-Link OUT2: switching output Colours to DIN EN 60947-5-2
Remarks	
Remarks	[1]) to EN50178, SELV, PELV *) BFSL = Best Fit Straight Line / LS = Limit Value Setting **) with temperature fluctuations < 10 K ***) in% of the span / 6 months [2]) Depends on lubrication, seal and pressure rating
Pack quantity [piece]	1