Product Data Sheet

Collet Locking Clips

John Guest



Applications	
Domestic Plumbing	✓

The John Guest Collet Locking Clip has been developed to prevent the accidental release of Speedfit fittings.

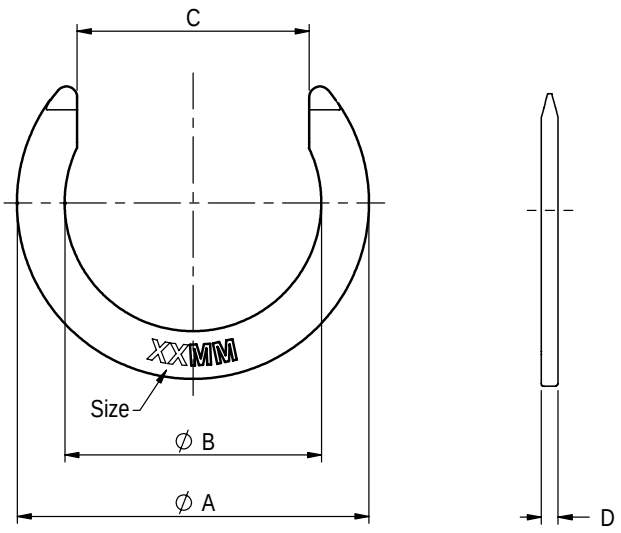

Product No.	Size	Colour	∅ A	∅ B	Dim C	Dim D
CM1815S	15mm	Grey	24.0	17.0	15.5	2.7
CM1815B	15mm	Blue	24.0	17.0	15.5	2.7
CM1815W	15mm	White	24.0	17.0	15.5	2.7
CM1815R	15mm	Red	24.0	17.0	15.5	2.7
CM1822S	22mm	Grey	33.5	24.5	22.1	1.6
CM1822B	22mm	Blue	33.5	24.5	22.1	1.6
CM1822W	22mm	White	33.5	24.5	22.1	1.6
CM1822R	22mm	Red	33.5	24.5	22.1	1.6

Material	Acetal Co-Polymer (Unfilled)

All Dimensions in mm

ECN16061

THE COPYRIGHT IN THIS DRAWING AND THE PRODUCTS REFERRED THEREON BELONG TO JOHN GUEST INTERNATIONAL LIMITED AND THIS DRAWING NOR THE INFORMATION CONTAINED HEREIN SHALL BE PRODUCED IN ANY FORM OR USED FOR ANY PURPOSE WITHOUT WRITTEN CONSENT © 2004

The company has a policy of continuous research and development and reserves the right to amend without notice the specification and design of all products illustrated. For details of terms and conditions and any other technical enquiries, please contact our Customer Services Department.

ISSUE 1 29-09-04

DS-CM18

ECN16061
NEW DRAWING RELEASE

ISSUE	DATE DRAWN	DATE ISS.	DRN. BY	ISS. BY	ECN	CHECKED	APPROVED
1	29-09-04	29-09-04	DSA	DSA	16061	DAP	DAP

DATA SHEET No.	DS-CM18
TITLE	COLLET LOCKING CLIPS

Location: MCL1-C
File: DS-CM18[1][C].pdf
Release Number: 000000-C-FILX
CURRENT PRODUCTION
User: kaym
Printed/Downloaded: 18 Aug 15,09:29
UNCONTROLLED IF PRINTED OR DOWNLOADED