TENSATOR®

875 Popular

The 875 Popular post is a functional, cost effective post.
This practical post is ideal for areas with high traffic levels.

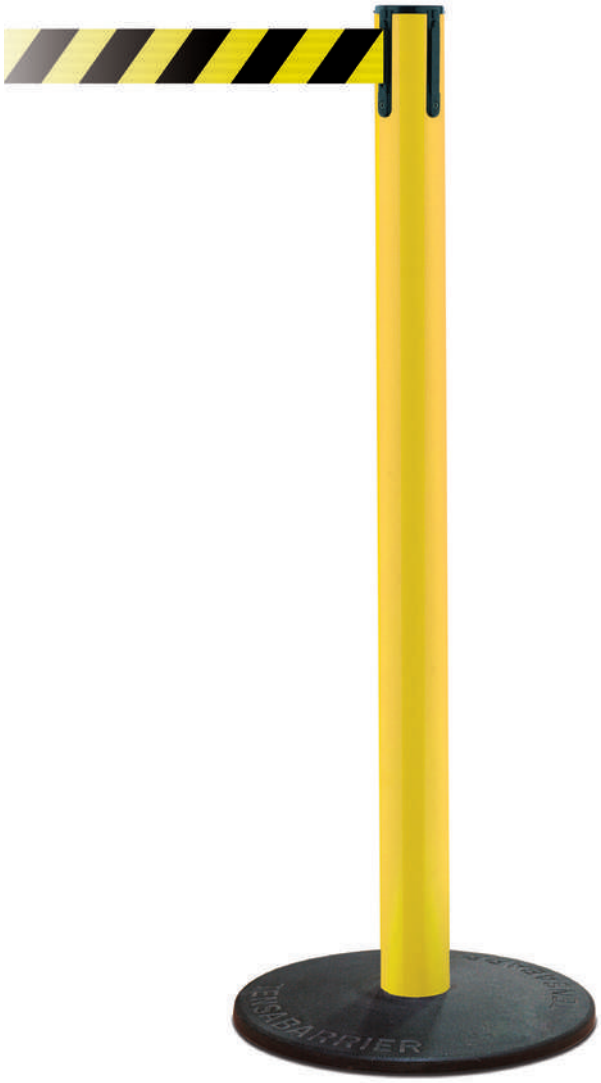

Features

- UPVC plastic post available in 5 different colours (Black, Red, Yellow, Blue, White)
- 4-way connectivity
- Hard wearing cast iron branded base
- Constant torque webbing retraction
- Supplied with anti-tamper tape end as standard
- 2.3m of retractable webbing
- Accommodates the full range of sign holders

Benefits

- Post can be coated upon request to enable outdoor usage
- Pricing makes it cost effective for long queuing environments
- 2.3m webbing extension enables your queue to be more contained due to the more frequent appearance of posts
- The ultimate in flexibility, the Tensabarrier® is easy to set up
- Guide customers & employees
- Reduces customer stress by removing ambiguity as to where the customer should queue and by providing separation between individuals and queue lines

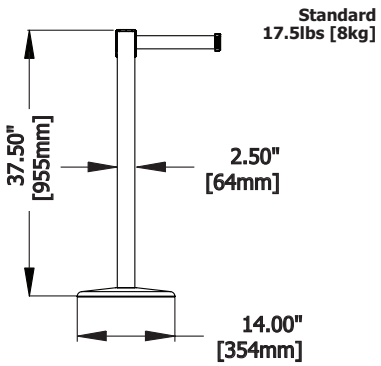

Applications

- Great for theme parks, attractions and tourist environments

height	955mm	tube O.D.	64mm
base dia.	354mm	weight	8kg

MILTON KEYNES +44 1908 684600
NEW YORK +1 631 666 0300
DUBAI +971 4 2997228
PARIS +33 1 43 09 85 00
FRANKFURT +49 69 3003 890-0
WROCLAW +48 71 359 3800

www.tensatorgroup.com

Owing to the dynamic nature of our business, specifications are constantly being changed and therefore this literature is for informational purposes only. For the most up to date information, please visit our website www.tensatorgroup.com. Tensator makes no warranties, express or implied, in this document. E&OE.