efector200

E20720

MOUNTING SET 1 ROD MOUNTING

Accessories

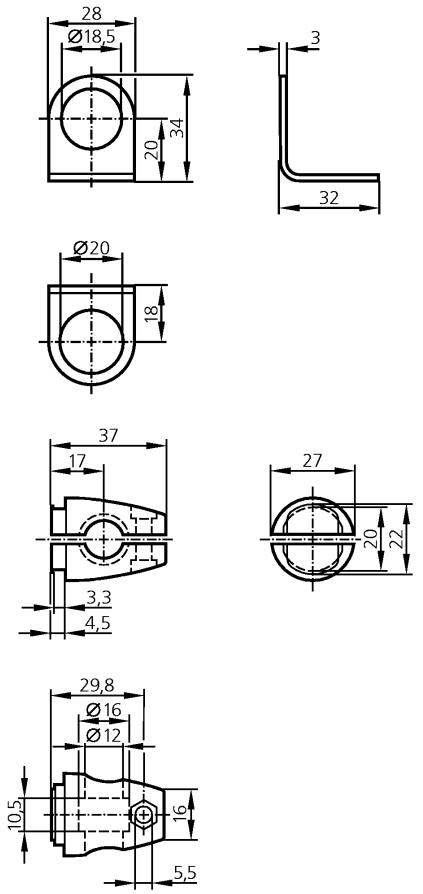

Product characteristics

Mounting set

Ø 18.5 mm

Clamp mounting

Mechanical data

Design		for types OG, IG, KG
Housing materials		clamp: diecast zinc; fixture: steel
Type of mounting		rod mounting Ø 12 mm
Weight	[kg]	0.104

Remarks

Pack quantity	[piece]	1