Your Expert Partner for **Human Machine Interfaces**

Switching element

Distribution by
Rs-online

45-312.1X40

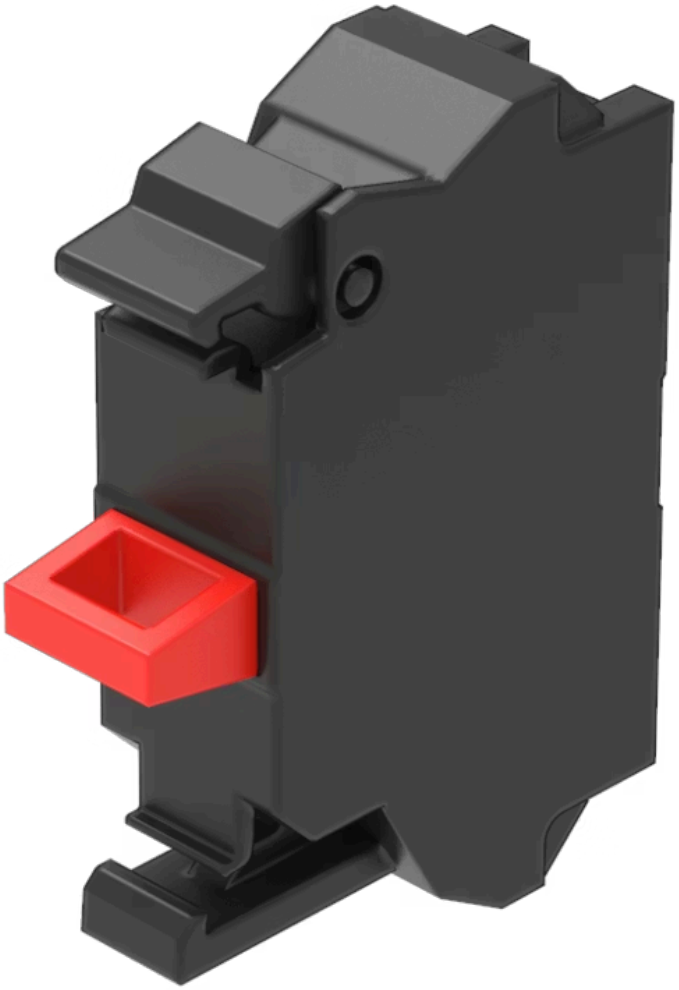

https://rs-online.eao.com/component/45-312.1X...

Your product:



45-312.1X40
Switching element

MOUNTING

Component mounting type: Front mounting

ELECTRICAL CHARACTERISTICS

Switching voltage and switching current:

at AC-12						
Voltage	24 V	48 V	110 V	230 V	400 V	500 V
Current	10 A	10 A	10 A	8 A	6 A	10 A
at AC-15						
Voltage	24 V	48 V	110 V	230 V	400 V	500 V
Current	6 A	6 A	6 A	4 A	3 A	1,4 A
at DC-12						
Voltage	24 V	48 V	110 V	230 V	400 V	500 V
Current	10 A	5 A	2,5 A	1 A	0,3 A	0,2 A
at DC-13						
Voltage	24 V	48 V	110 V	230 V	400 V	500 V
Current	3 A	1,5 A	0,7 A	0,3 A	0,1 A	0,07 A

Contacts: 1 NC

Contact reliability: One contact failure per 10 million switching operations (5 V, 1 mA)
One contact failure per 100 million switching operations (17 V, 5 mA)

Insulation voltage: Rated value 500 V

Surge voltage resistance: Rated value 6 kV

Switching rating: 500 V AC @ 10 A

Pollution degree: 3

Standards: The switches comply with the “Standards for low-voltage switching devices” EN IEC 60947-5-1

Thermal current Ith: 10 A Max. permissible current for continuous operation and ambient temperatures not exceeding the specified max. values.

MECHANICAL CHARACTERISTICS

Terminal: Spring-type terminal

Contact material: Gold

Switching system:	Slow-make switching element
Switching system:	The double-break, slow-make switching element is equipped with normally open or normally closed contact. The normally closed contact has forced opening. Up to six switching elements can be snapped to each holder. The NC contact opens automatically upon disconnection of the actuator. On delivery, the contact is open (= safe state). Activation (= NC contacts on the non-actuated commanding device are closed) takes place upon first-time actuation after the contact block is snapped onto the actuator.
Mechanical lifetime:	10 Mil. cycles of operation
Tightening torque:	0.8 … 0.9 Nm
Operating frequency:	Max. 3 600/h
Terminal details 1:	Solid 2 x (0.25 … 1.5mm^2) Finely stranded – Without end sleeves 2 x (0.5 … 1.5 mm^2) – With end sleeves 2 x (0.5 … 0.75 mm^2) – For AWG cables for auxiliary contacts 2 x (24 … 16)
Wire cross section:	Solid 2 x (0.25 … 1.5mm^2) Finely stranded – Without end sleeves 2 x (0.5 … 1.5 mm^2) – With end sleeves 2 x (0.5 … 0.75 mm^2) – For AWG cables for auxiliary contacts 2 x (24 … 16)
Weight:	0.018 kg

AMBIENT CONDITION

IP Protection:	IP20 Terminal, IP40 Housing
Operating temperature:	– 25 °C … + 70 °C
Storage temperature:	– 40 °C … + 80 °C
Shock resistance:	According to IEC 60068-2-27: Sinusoidal half-wave 50 g / 11 ms
Vibration resistance:	According to IEC 60068-2-6: 2 … 500 Hz: 5 g
Climate resistance:	During operation according to IEC 60721: 3K6, 3C3, 3S2, 3M6

CERTIFICATE

Approbations:	CCC, CSA, UL
Conformities:	CE, UKCA
REACH:	REACH compliant
RoHS:	RoHS compliant

OTHER

Short Description:	Switching element, Slow-make switching element, 500 V AC @ 10 A, Gold, 1 NC,

Spring-type terminal, Front mounting

Product attributes: Front plate mounting

Switching element type: Single

Wiring diagrams:

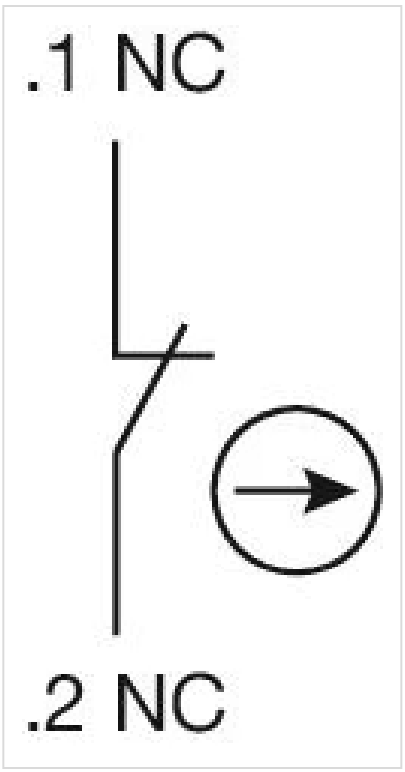

Dimension drawings:

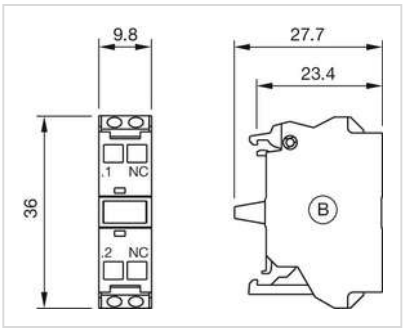

B = Spring-type terminal
for Part No. 45-312.1Z40, 45-312.1X40