Series 1590UFL (Flanged Lid)

Top View of Assembly

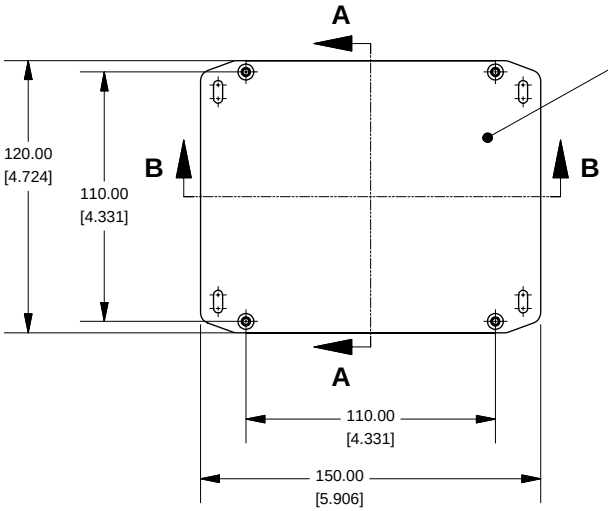

SECTION A-A
End View of Assembly

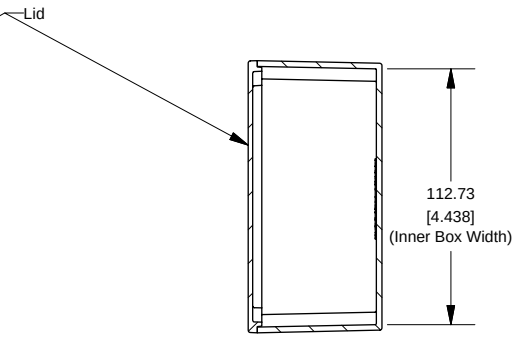

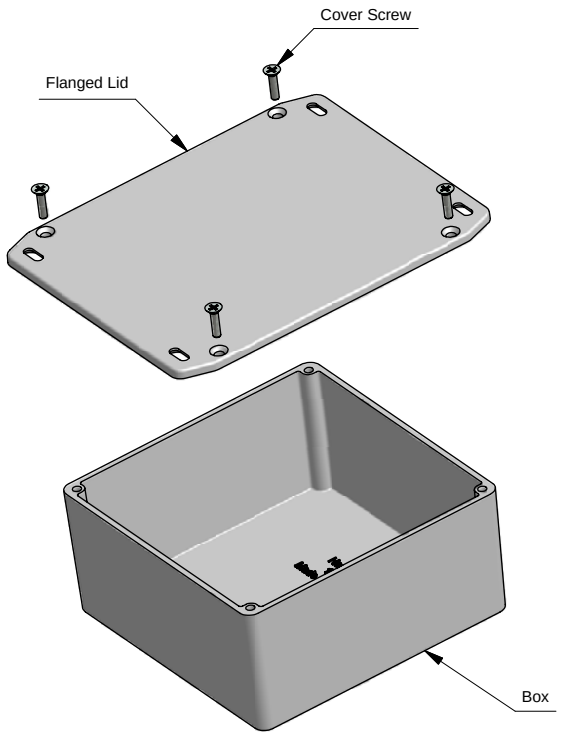

SECTION B-B
Side View of Assembly

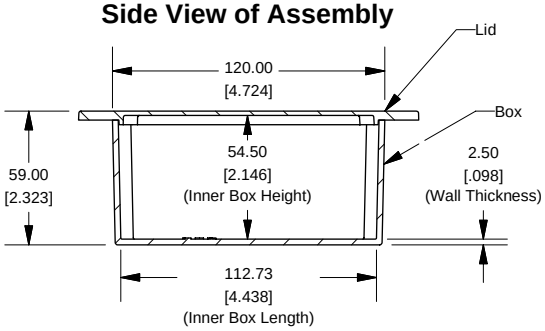

Top View Looking Inside Box

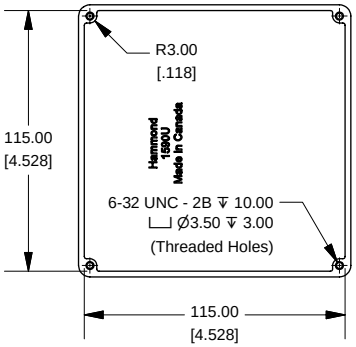

Lid

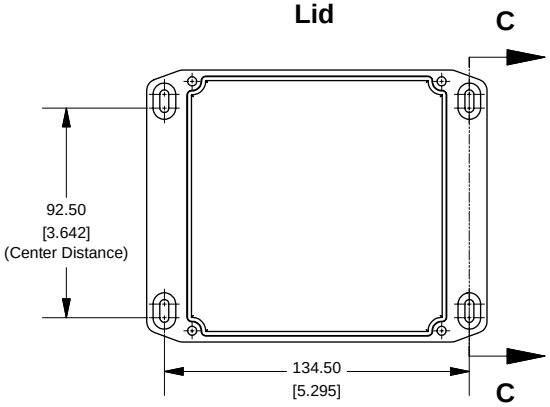

SECTION C-C
Side of Slot

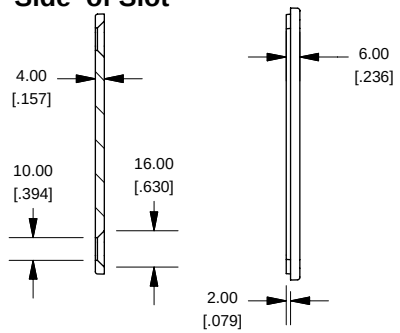

NOTE
Purchased assembly includes box, lid and 4 cover screws. Box and lid are made from Diecast Aluminum Alloy (alloy type 360.1).

PART NUMBERS	
1590UFL Enclosure	
Unfinished	1590UFL
Black Textured Powder Paint	1590UFLBK
1590UFL Liquid Resistant Enclosure (Silicon Factory Installed Gasket)	
Unfinished	1590WUFL
Black Textured Powder Paint	1590WUFLBK
ACCESSORIES	
Unfinished	
Cover Screws (Pkg 100) **[6-32 x 1/2" Nickel Plated Screws]**	1590MS100
Black Textured Powder Paint	
Cover Screws (Pkg 50) **[6-32 x 1/2" Stainless Steel Black Screws]**	1590MS50BK

HAMMOND MANUFACTURING™

www.hammondmfg.com