BMF 235K-PS-C-2A-SA95-S4-00,3
Ordering code: BMF00C9

Sensors for cylinders
BMF 235
Cylinder housing: T-slot

PNP, Normally open (NO)
Miniature

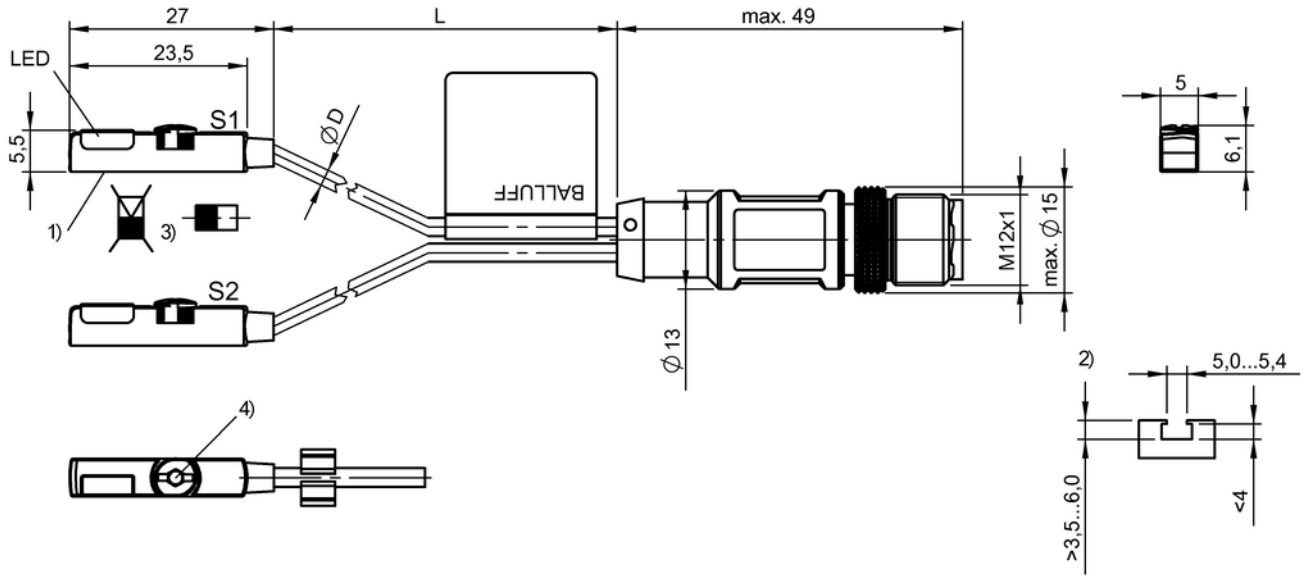

1) Active surface, 2) See remarks, 3) See remarks, 4) See remarks

Characteristic data

Connection type	Cable with connector
Operating voltage	10...30 V DC
Trademark	GLOBAL
Short-circuit protected	yes
Protected against polarity reversal	yes
Protected against miswiring	no

Electrical data

Electrical version	DC, direct current
Rated operating voltage Ue DC	24,0 V
Effective operating current Ie	200 mA
Rated insulation voltage Ui	75 DC
Rated short circuit current	100 A
Output resistance Ra	Open drain
Load capacitance max. (at Ue)	1 µF
No-load current Io damped max.	6 mA
Max. no-load cur. Io undamped	3 mA
Off-state current Ir max.	80 µA
Ripple max. (% of Ue)	15
Switching freq. f max.	3000 Hz
Voltage drop static max.	2,5 V
Turn-off delay toff max.	0,10 ms
Turn-on delay ton max.	0,10 ms
Rated switching field strength	1,2 kA/m
Assured switching field streng	2 kA/m

Mechanical data

Housing material	PA 12
Sensing surface material	PU
Cable jacket material	PUR
Cable short designation	Li12Y11Y-O
Cable length	0,3 m
Cable diameter D max.	2,5
Connector type	M12x1-S04
Ambient temperature	-25...85 °C
Temperature drift max. % of Hn	0,3 %
Tightening torque	0.4 Nm

Basic data

Enclosure Type per IEC 60529	IP67
Degree of contamination	3
Basic standard	IEC 60947-5-2
Utilisation category	DC 13

Remarks

Scope of delivery: Cable clip for T-slot

2) Application area: pneumatic cylinder with t-slot. For dimensions, see sketch in product view.

4) Hex key size 2.0 mm: Max. tightening torque 0.4 Nm. Screwdriver 4x0.8 mm: Max. tightening torque 1 Nm

- Rated operating current Ie for thermally coupled installation in metal.

3) Damping magnet, axially magnetized

LISTED IND. CONT. EQ. 81U2 for use in the secondary of a class 2 source of supply

Internet : www.balluff.com
Balluff Germany : +49 (0) 7158 173-0, 173-370
Balluff USA : 1-800-543-8390
Balluff China : +86 (0) 21-50 644131

BMF 235K-PS-C-2A-SA95-S4-00,3
Ordering code: BMF00C9

BALLUFF
sensors worldwide

Sensors for cylinders
BMF 235
Cylinder housing: T-slot

PNP, Normally open (NO)
Miniature

