DATASHEET - FAK-S/KC11/I



Palm switch, 1N/O+1N/C, mushroom black, surface mounting

Part no.	**FAK-S/KC11/I**
Catalog No.	**229749**
Alternate Catalog No.	**FAK-S-KC11-I**
EL-Nummer (Norway)	**4355221**

Delivery program

Product range	Foot and palm switches
Basic function	Complete devices
Single unit/Complete unit	Complete unit
Function	momentary
Contacts	
N/O = Normally open	1 N/O
N/C = Normally closed	1 NC
Notes	= safety function, by positive opening to IEC/EN 60947-5-1
Contact sequence	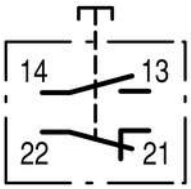
Colour	
Button	Black
	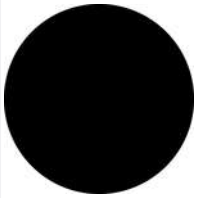
enclosure top	gray
	
Enclosure base	Black
	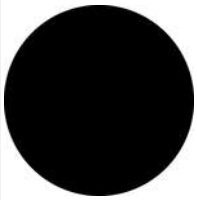
Approval	

Connection to SmartWire-DT			no

Technical data

General

Standards			IEC/EN 60947-5-1, VDE 0660
Lifespan, mechanical	Operations	x 10^6	> 1
Operating frequency	Operations/h		≦ 3600
Actuating force		N	20 - 40
Degree of protection, IEC/EN 60529			IP66, IP67, IP69
Climatic proofing			Damp heat, constant, to IEC 60068-2-78 Damp heat, cyclic, to IEC 60068-2-30
Ambient temperature			
Open		°C	-25 - +55
Mounting position			As required
Mechanical shock resistance		g	> 15 Shock duration 11 ms Sinusoidal according to IEC 60068-2-27

Design verification as per IEC/EN 61439

Technical data for design verification			
Rated operational current for specified heat dissipation	I_n	A	6
Heat dissipation per pole, current-dependent	P_{vid}	W	0.11
Equipment heat dissipation, current-dependent	P_{vid}	W	0
Static heat dissipation, non-current-dependent	P_{vs}	W	0
Heat dissipation capacity	P_{diss}	W	0
Operating ambient temperature min.		°C	-25
Operating ambient temperature max.		°C	55
IEC/EN 61439 design verification			
10.2 Strength of materials and parts			
10.2.2 Corrosion resistance			Meets the product standard's requirements.
10.2.3.1 Verification of thermal stability of enclosures			Meets the product standard's requirements.
10.2.3.2 Verification of resistance of insulating materials to normal heat			Meets the product standard's requirements.
10.2.3.3 Verification of resistance of insulating materials to abnormal heat and fire due to internal electric effects			Meets the product standard's requirements.
10.2.4 Resistance to ultra-violet (UV) radiation			Please enquire
10.2.5 Lifting			Does not apply, since the entire switchgear needs to be evaluated.
10.2.6 Mechanical impact			Does not apply, since the entire switchgear needs to be evaluated.
10.2.7 Inscriptions			Meets the product standard's requirements.
10.3 Degree of protection of ASSEMBLIES			Does not apply, since the entire switchgear needs to be evaluated.
10.4 Clearances and creepage distances			Meets the product standard's requirements.
10.5 Protection against electric shock			Does not apply, since the entire switchgear needs to be evaluated.
10.6 Incorporation of switching devices and components			Does not apply, since the entire switchgear needs to be evaluated.
10.7 Internal electrical circuits and connections			Is the panel builder's responsibility.
10.8 Connections for external conductors			Is the panel builder's responsibility.
10.9 Insulation properties			
10.9.2 Power-frequency electric strength			Is the panel builder's responsibility.
10.9.3 Impulse withstand voltage			Is the panel builder's responsibility.
10.9.4 Testing of enclosures made of insulating material			Is the panel builder's responsibility.
10.10 Temperature rise			The panel builder is responsible for the temperature rise calculation. Eaton will provide heat dissipation data for the devices.
10.11 Short-circuit rating			Is the panel builder's responsibility. The specifications for the switchgear must be observed.
10.12 Electromagnetic compatibility			Is the panel builder's responsibility. The specifications for the switchgear must be observed.
10.13 Mechanical function			The device meets the requirements, provided the information in the instruction leaflet (IL) is observed.

Technical data ETIM 7.0

Low-voltage industrial components (EG000017) / Foot-/palm switch complete (EC000231)			
Electric engineering, automation, process control engineering / Low-voltage switch technology / Command and alarm device / Foot, palm switch (ecl@ss10.0.1-27-37-12-17 [AKF035014])			
Unlocking method			None
Colour cap			Black
Number of contacts as normally open contact			1
Number of contacts as normally closed contact			1
Switching function latching			No
Spring-return			Yes
Hole diameter		mm	0
Degree of protection (IP)			IP67/IP69K
Degree of protection (NEMA)			4X

Approvals

Product Standards			IEC/EN 60947-5; UL 508; CSA-C22.2 No. 14-05; CSA-C22.2 No. 94-91; CE marking
UL File No.			E29184
UL Category Control No.			NKCR
CSA File No.			012528
CSA Class No.			3211-03
North America Certification			UL listed, CSA certified
Degree of Protection			UL/CSA Type 3R, 4X, 12, 13

Dimensions

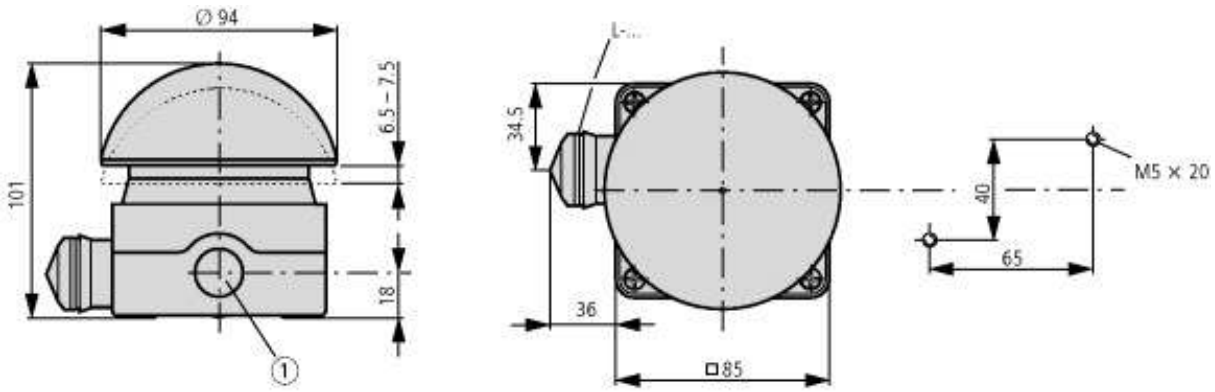

3 x M20 (PG 13.5) on the side
1 x M16 in the base

Assets (links)

Declaration of CE Conformity

00002840

Instruction Leaflets

IL04716006Z2018_06
IL04716017Z2018_05

© 10/2019 by Eaton Industries GmbH