efector600

E35063

AIR PURGE

Accessories

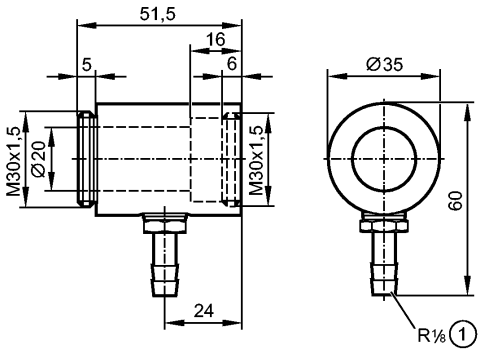

1: Tube nozzle for tube with 8-9 mm bore

Product characteristics

Air purge

for infrared temperature sensors TWxxxx, M30 design

Application

Application	Protection against soiling of the lens

Mechanical data

Design		for types TW
Housing materials		stainless steel (303S22); brass; sealing ring: aluminum
Weight	[kg]	0.206
Connection		Compressed air connection R1/8"
Air pressure		≤ 6 bar
Installation		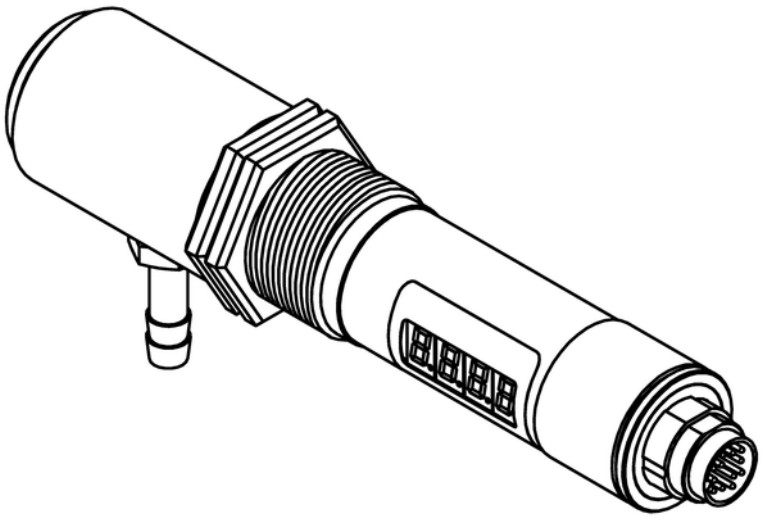

Remarks

Pack quantity	[piece]	1