E10818

Jumper cable with valve plug

VVSAB041MSS00,6A03STAH030VAS

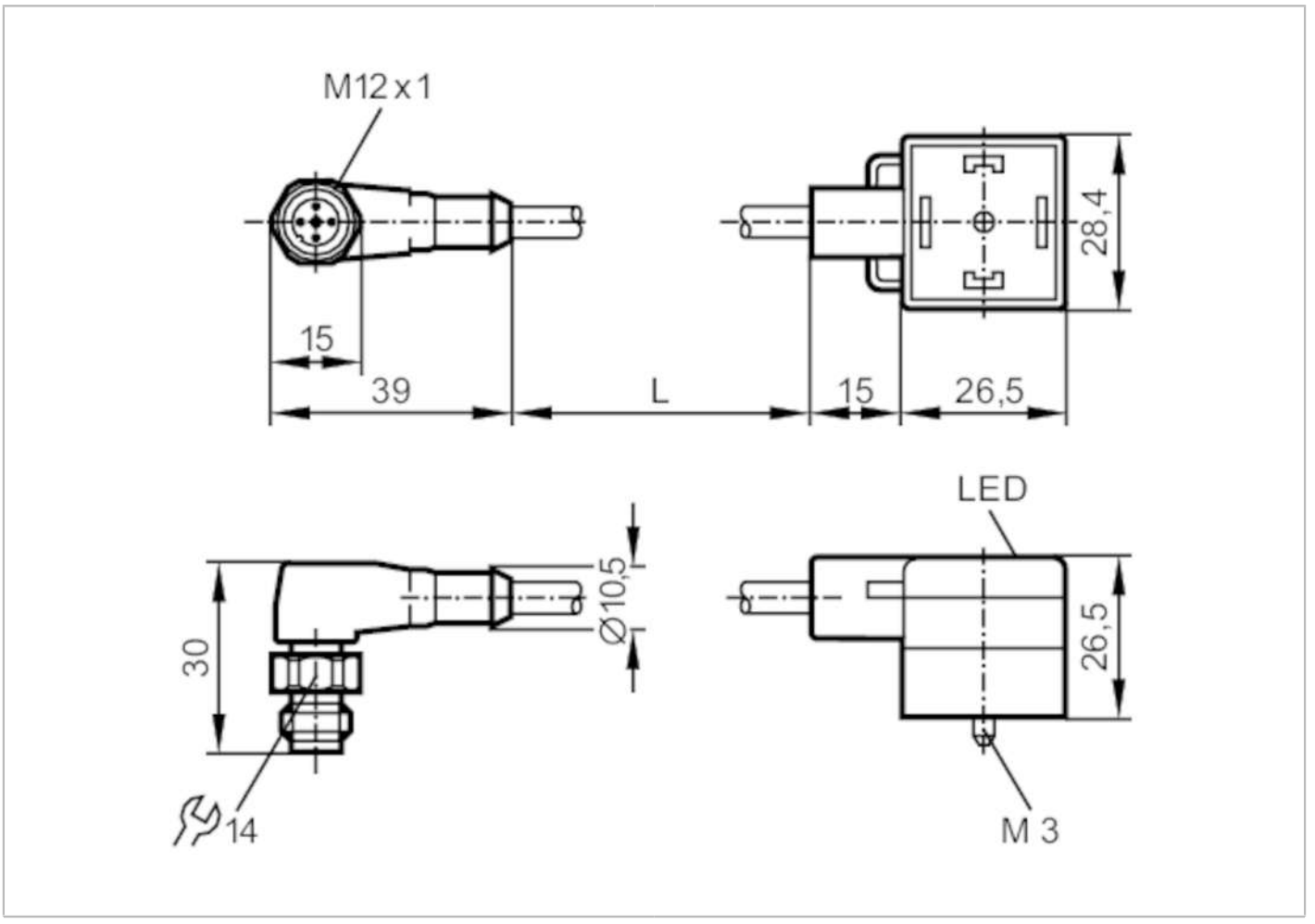

Application			
Special feature			Halogen-free
Electrical data			
Operating voltage	[V]		< 24 AC/DC
Overvoltage protection			yes; (VDR)
Operating conditions			
Ambient temperature	[°C]		-25...90
Protection			IP 67
Mechanical data			
Weight	[g]		76
Dimensions	[mm]		30 x 15 x 39
Materials			TPU
Moulded-body material			TPU
Material nut			stainless steel (1.4404 / 316L)
Displays / operating elements			
Display		operation	1 x LED, yellow

E10818

Jumper cable with valve plug

VVSAB041MSS00,6A03STAH030VAS

Accessories

Items supplied	screw
	panel for labelling

Remarks

Pack quantity	1 pcs.

Electrical connection - plug

Connector: 1 x M12, angled; coding: A; Moulded body: TPU; Locking: stainless steel (1.4404 / 316L)

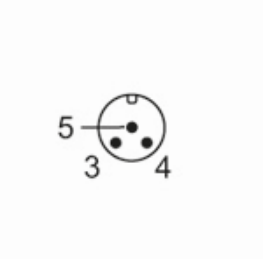

Electrical connection

Cable: 0.6 m, PUR, Halogen-free, black, Ø 4.8 mm; 3 x 0.5 mm² (16 x Ø 0.2 mm)

Connection

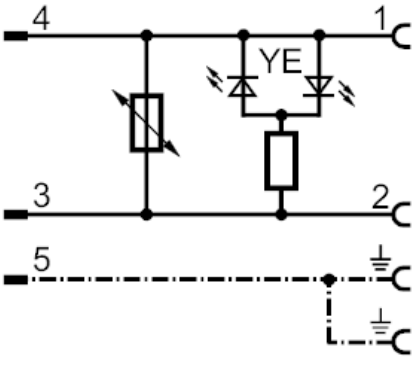

Electrical connection - socket

Connector: 1 x valve type A DIN, angled; Moulded body: TPU; Locking: stainless steel (1.4404 / 316L)

