TI00350F/00/EN/15.20
71481670
2020-09-29

Technical Information
Nivotester FTL325P

Vibronic



Level detector with intrinsically safe signal circuit for connection to Liquiphant and Soliphant sensors

Application

- Point level detection in liquid tanks and bulk solids silos, also in hazardous areas
- For sensors in Zone 0 or Zone 20
- Liquid detection in pipes for dry-run protection of pumps
- Overfill prevention in tanks with flammable or non-flammable water-polluting liquids
- Two-point control and point level detection in one switching unit
- Application in safety systems with functional safety requirements up to SIL 3 in accordance with IEC 61508 when using the Liquiphant M/S with electronic insert FEL57 or Liquiphant FTL51B, FTL62, FTL64 with electronic insert FEL67

Your benefits

- Intrinsically safe signal circuits [Ex ia] for use of sensors in hazardous areas
- Compact housing for simple side-by-side installation on standard DIN rails in cabinet
- Easy connection with plug-in terminal blocks
- Simple proof testing according to WHG with a Liquiphant M/S or Liquiphant connected: one-touch operation
- High proof test coverage: from the Nivotester to the sensor and downstream plant units

Endress+Hauser
People for Process Automation

Table of contents

About this document 3
Document conventions 3

Function and system design 3
Measuring principle 3
Measuring system 6

Input 8
Measured variable 8
Measuring range 8
Input signal 8

Output 9
Output signal 9
Overvoltage category according to EN 61010 9
Protection class 9
Signal on alarm 9
Galvanic isolation 9

Power supply 9
Electrical connection 9
Supply voltage 10
Power consumption 10

Performance characteristics 10
Switch-on behavior 10

Installation 10
Mounting location 10
Orientation 10

Environment 12
Ambient temperature range 12
Climate and mechanical application class 12
Degree of protection 12
Electromagnetic compatibility (EMC) 12

Mechanical construction 12
Design, dimensions 12
Weight 12
Materials 12
Terminals 12

Operability 14
Operating concept 14
Display elements 14
Operating elements 14

Certificates and approvals 15
CE mark 15
RCM-Tick mark 15
Ex approval 15
Type of protection 15
Overfill prevention 15
Other standards and guidelines 15
Functional safety 15

Ordering information 15

Accessories 16
Protective housing 16

Supplementary documentation 16

About this document

Document conventions

Symbols for certain types of information

Tip
Indicates additional information

Reference to page

Symbols for graphics

1, 2, 3, ...
Item numbers

A, B, C, ...
Views

Function and system design

Measuring principle

Signal transmission

The intrinsically safe signal inputs of the Nivotester are galvanically isolated from the mains and the output.

The Nivotester supplies a DC current to the sensors, e.g. Liquiphant, via a two-wire loop and receives a frequency signaling whether or not the point level has been reached. Current pulses (PFM signals = pulse-frequency modulation) from the transmitter with a pulse width of approx. 200 µs and a current strength of approx. 10 mA are superimposed on the power supply.

Signal evaluation

The Nivotester evaluates the frequency and switches the output relay for the level alarm. A yellow LED on the front panel of the Nivotester indicates the relay switch status.

Fail-safe mode

By selecting the correct fail-safe mode, you ensure that the relays always operate with quiescent current safety.

- MAX = maximum safety: the relay drops out when the switch point is exceeded (sensor is covered), a fault occurs or the power supply fails.
- MIN = minimum safety: the relay drops out when the switch point is undershot (sensor is not covered), a fault occurs or the power supply fails.

Point level detection and pulse-frequency modulation (PFM) as a function of the level and fail-safe mode

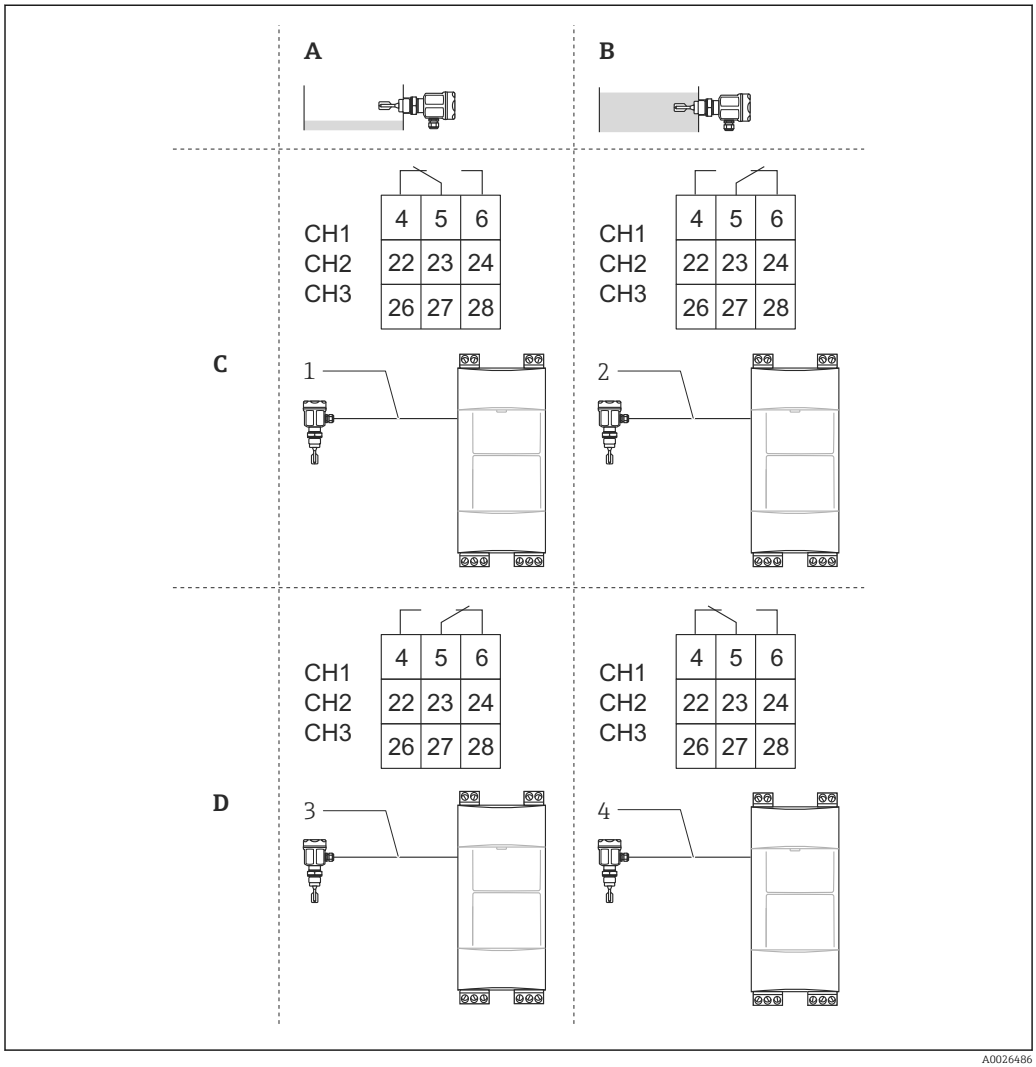

A Tuning fork not covered
B Tuning fork covered
C MAX fail-safe mode on Nivotester
D MIN fail-safe mode on Nivotester
1 PFM approx. 150 Hz
2 PFM approx. 50 Hz
3 PFM approx. 150 Hz
4 PFM approx. 50 Hz

For applications requiring functional safety in accordance with IEC 61508 (SIL), see the "Supplementary documentation" section of the Functional Safety Manual.

Function monitoring

To increase operational safety, the Nivotester is equipped with a function monitoring system. As there is a test button for every channel, function monitoring can be performed separately. The power supply to the sensor is interrupted during this process.

The red LED on the front panel indicates that a fault has occurred that causes the relays for the level alarm and fault signaling system to drop out.

A fault is signaled when the Nivotester stops receiving current pulses. This can happen, for example, in the event of:

- A short-circuit, or if the signal line to the sensor is disconnected
- Sensor corrosion
- Defective electronics in the sensor
- The input circuit of the Nivotester is defective

Simple proof testing with Liquiphant M, Liquiphant S and Liquiphant

Overfill prevention systems must undergo regular function checks.

For the Nivotester and the downstream plant units, there is the possibility of performing the function test without having to approach the sensor or remove it.

There is a test button for each signal input on the front panel of the Nivotester. Pressing the test button interrupts the power supply. When the test button is released, the measuring device receives power again and the test sequence begins.

For detailed information on proof testing, see:
- Liquiphant: SIL manual, WHG documents
- Liquiphant M/S: KA00147F, SIL manual, WHG documents

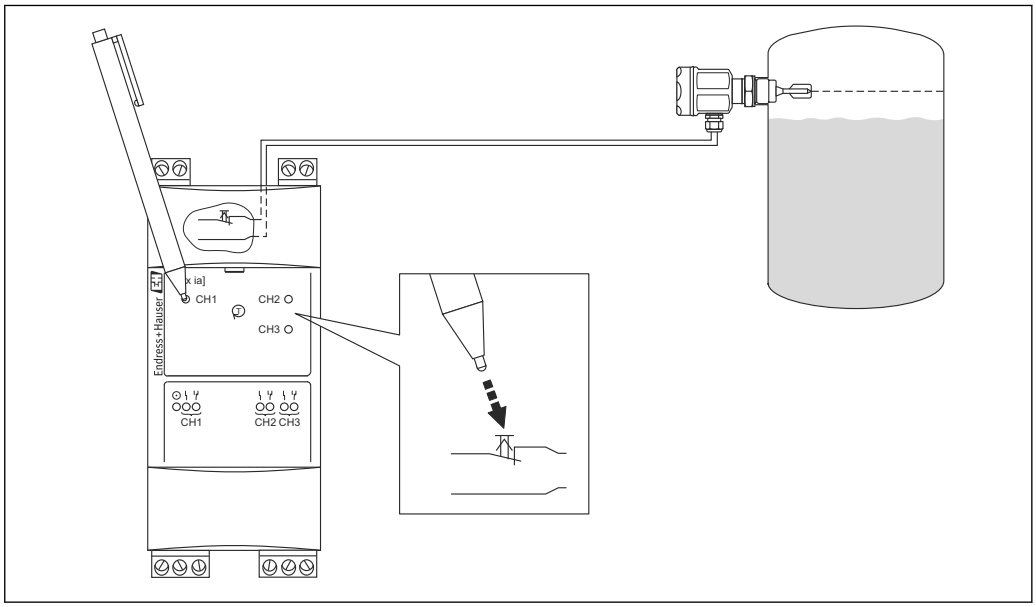

A0026114

Two-point control (Δs)

Two-point control in a tank is possible with the 3-channel Nivotester (e.g., for pump control). The installation location of the sensors defines the switching hysteresis.

Measuring system

The measuring system can consist of the following components:

- 1 to 3 sensors, e.g., Liquiphant M/S or Liquiphant
- 1-channel or 3-channel Nivotester
- Control or signal devices

Comply with the requirements in the relevant documentation ("Supplementary documentation" section) for applications in safety systems according to SIL 1, SIL 2 and SIL 3 or WHG.

1-channel Nivotester

- 1 sensor
- 1-channel Nivotester
- Control or signal devices

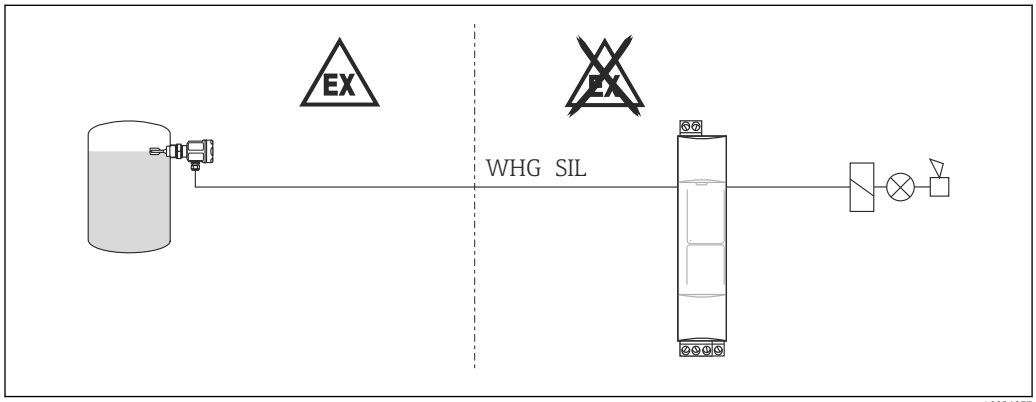

A0026077

3-channel Nivotester

1. The 3 individual channels are used for point level measurement

- 3 sensors
- 3-channel Nivotester
- Control or signal devices

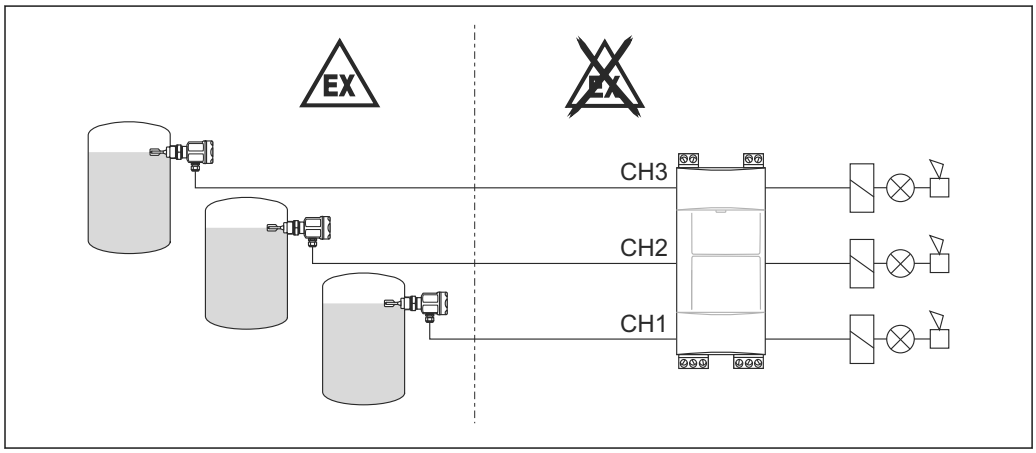

A0026079

2. Channels CH2 and CH3 are used for two-point control Δs

- 2 sensors
- 3-channel Nivotester
- Control or signal devices

If channel CH1 is not used, the alarm must be switched "off".

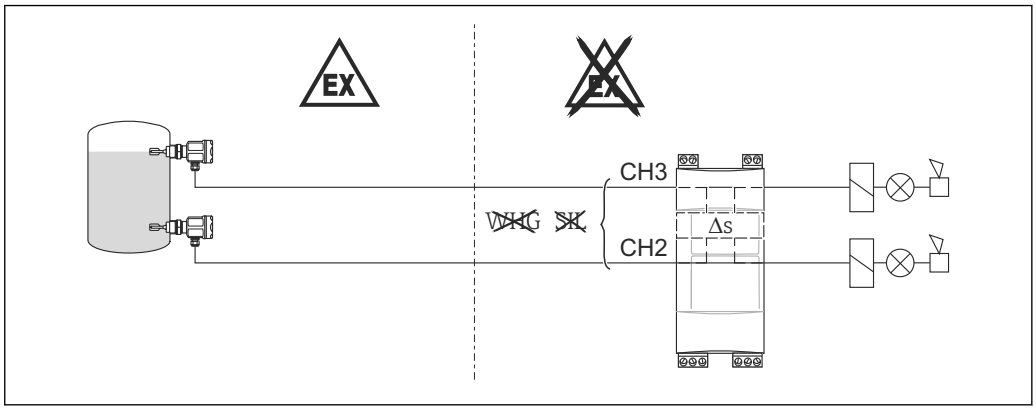

A0026080

For more detailed information on the wiring scheme for WHG or SIL, see the WHG documents and SIL manual.

3. Channels CH2 and CH3 are used for two-point control Δs and channel CH1 is used for overfill prevention

- 3 sensors
- 3-channel Nivotester
- Control or signal devices

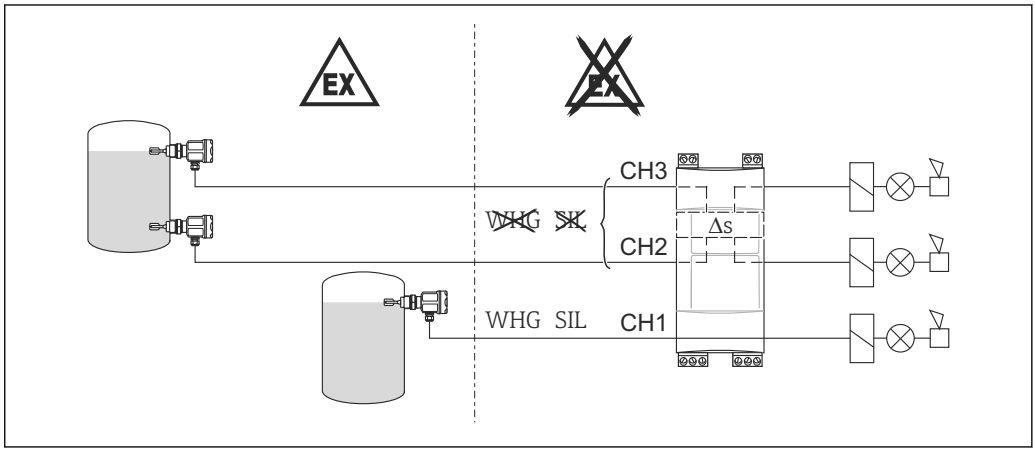

A0026082

4. Channel CH2 is used for point level measurement with two level relays and channel CH1 is used for additional point level measurement

- 2 sensors
- 3-channel Nivotester
- Control or signal devices

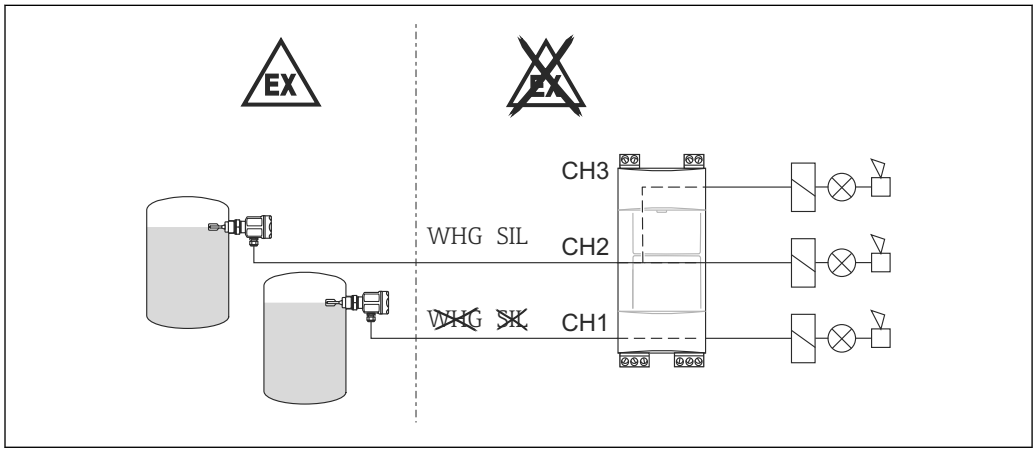

A0026084

5. Channel CH2 is used for point level measurement with two level relays

- 1 sensor
- 3-channel Nivotester
- Control or signal devices

If channel CH1 is not used, the alarm must be switched "off".

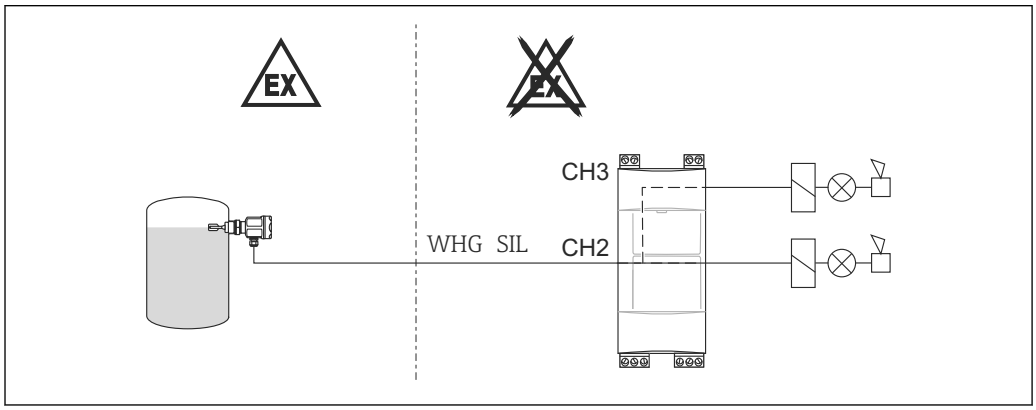

A0026085

Input

Measured variable

The point level signal is triggered at MIN level or MAX level, depending on the setting.

Measuring range

The measuring range depends on the installation location of the sensors.

Input signal

- Galvanically isolated from power supply and output
- Type of protection: intrinsic safety [Ex ia] IIC
- Connectable sensors:
  - Liquiphant FTL51B, FTL62 and FTL64 with FEL67
  - Liquiphant M FTL50(H), FTL51(H), FTL51C with FEL57
  - Liquiphant S FTL70/71 with FEL57
  - Soliphant M FTM50, FTM51, FTM52 with FEM57
- Sensors powered by Nivotester

- Connection cable: two-wire, shielding not required
- Cable length/cable resistance: 1000 m (3281 ft)/max. 25 Ω per wire
- Signal transmission: pulse-frequency modulation (PFM)

Please refer to the relevant certificates for additional information on the use of the sensors in the hazardous area .

Output

Output signal

- Relay output per channel: a potential-free changeover contact for the level alarm
- Quiescent current fail-safe mode: MIN/MAX safety can be selected with DIL switch
- 1 fault-signaling relay for channels 1, 2 and 3 (1 potential-free changeover contact, but it is only possible to connect to two contacts)
- Switching delay: approx. 0.5 s
- Operating life: at least 10^5 switching operations with maximum contact load
- Function indicator: LEDs for operation, level alarm and fault
- Relay contact switching capacity:
  Alternating voltage (AC)
  U ~ maximum 250 V
  I ~ maximum 2 A
  P ~ maximum 500 VA with cos φ ≥ 0.7
  Direct current (DC)
  U = maximum 40 V
  I = maximum 2 A
  P = maximum 80 W

Overvoltage category according to EN 61010

II

Protection class

II (double or reinforced insulation)

Signal on alarm

Level relay per channel dropped out; fault signaled by red LEDs, fault-signaling relay dropped out

Galvanic isolation

All input and output channels and relay contacts are galvanically isolated from each other. If simultaneously functional low voltage is connected to the power supply circuit or to the relay contacts, safe galvanic isolation is guaranteed up to a voltage of 150 V_{AC}.

Power supply

Electrical connection

Sensor operation in the hazardous area

Observe all national explosion protection regulations concerning the type and installation of intrinsically safe signal cabling.

The maximum permissible values for capacitance and inductance are provided in the Safety Instructions , see the "Documentation" section.

Connecting the sensors

The removable terminal blocks are color-coded into intrinsically safe and non-intrinsically safe terminals. This difference helps to ensure safe wiring.

Blue terminal blocks at top for hazardous area

Twin-core connection cable between the Nivotester and sensor, e.g. commercially available instrument cable or cores in a multi-core cable for measurement purposes.

Use a shielded cable in the event of strong electromagnetic interference, e.g. from machines or radio equipment. Only connect the shield to the grounding terminal in the sensor. Do not connect it to the Nivotester.

Connecting the signal and control units

Gray terminal blocks at bottom for the non-hazardous area

The relay function depends on the level and fail-safe mode. If a device is connected at high inductance (e.g. contactor, solenoid valve etc.), a spark arrester must be installed to protect the relay contact.

Connecting the supply voltage

Green terminal block at bottom

A fuse is integrated into the power supply circuit. An additional fine-wire fuse is not necessary. The Nivotester has reverse polarity protection.

Supply voltage

Alternating current version (AC)

Voltage range: 85 to 253 V_{AC}, 50/60 Hz

Direct current range (DC)

- Voltage range: 20 to 30 V_{AC}/ 20 to 60 V_{DC}
- D/C power supply:
  - 1-channel: maximum 85 mA
  - 3-channel: maximum 200 mA
- Permissible residual ripple within tolerance: U_{ss} = maximum 2 V

Power consumption

AC
- 1-channel: maximum 2.0 W
- 3-channel: maximum 4.2 W

DC
- 1-channel: 1.7 W (with U_{min} 20 V)
- 3-channel: 4.0 W (with U_{min} 20 V)

Performance characteristics

Switch-on behavior

Correct switch state after power-up: 10 to 40 s, depends on the connected sensor.

Installation

Mounting location

- The Nivotester must be housed in a cabinet outside the hazardous area.
- The devices must be mounted in such a way that they are protected from impact and weather conditions. Where possible, mount the device in a location where it is not exposed to direct sunlight, particularly in warm climates.
- A protective housing (IP65) for up to four 1-channel or two 3-channel Nivotesters is available for outdoor installation, see → 16 "Accessories" section.

Orientation

Horizontal orientation

Horizontal installation ensures better dissipation of heat and is therefore the preferred orientation.

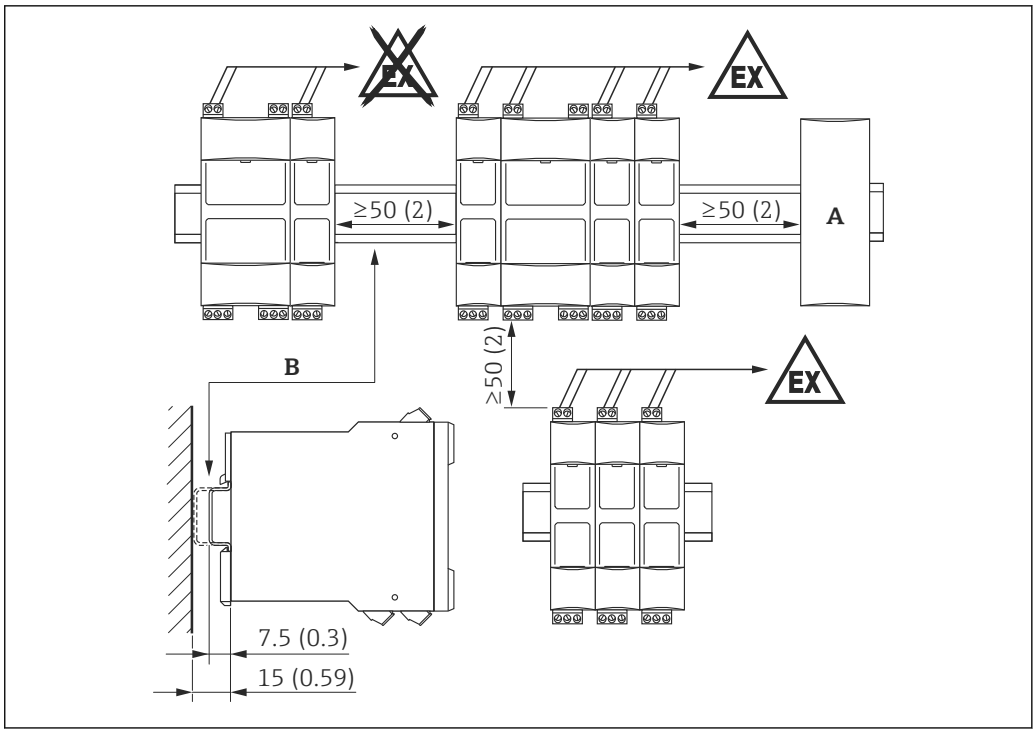

Dimensions mm (in)
A Connection of another device type
B DIN rail in accordance with EN 60715 TH35-7.5/15

Vertical orientation

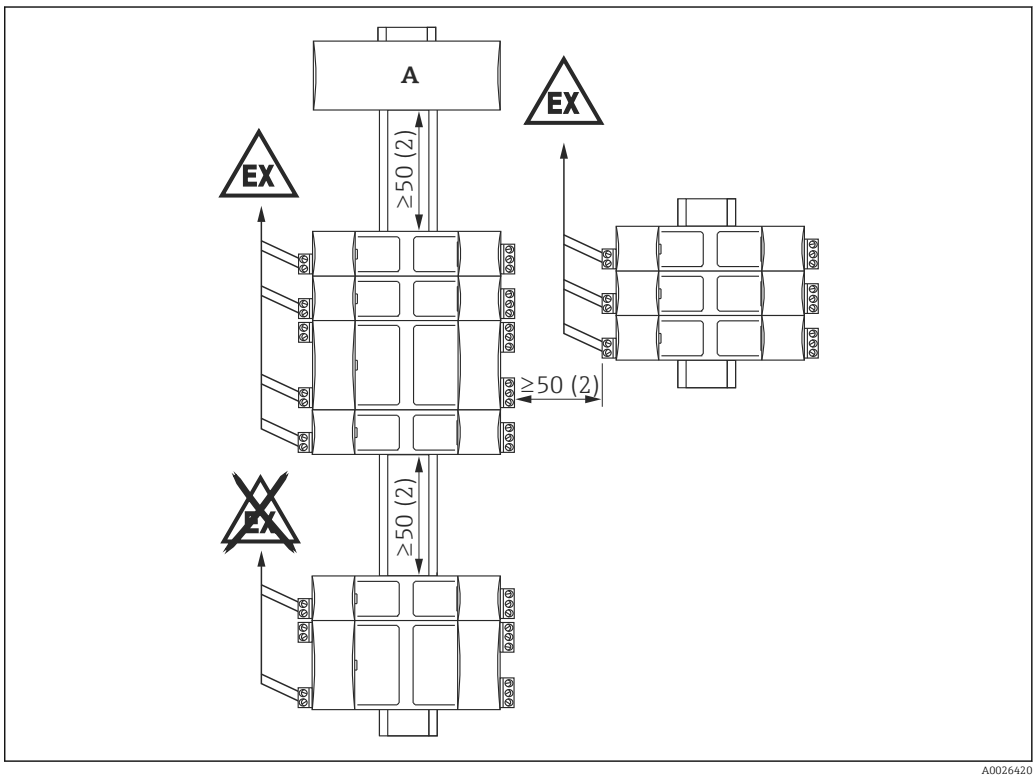

Dimensions mm (in)
A Connection of another device type

Environment

Ambient temperature range

- For single installation: −20 to +60 °C (−4 to 140 °F)
- For side-by-side installation without lateral spacing: −20 to +50 °C (−4 to +122 °F)
- For installation in protective housing: −20 to +40 °C (−4 to +104 °F)
  Up to four 1-channel or two 3-channel Nivotesters or a maximum of two 1-channel Nivotesters plus one 3-channel Nivotester fit in a protective housing.
- Storage temperature: −20 to +85 °C (−4 to 185), preferably at 20 °C (68 °F)

Climate and mechanical application class

3K3 and 3M2 in accordance with IEC/EN 60721-3-3

Degree of protection

- IP20 (as per IEC/EN 60529)
- IK06 (as per IEC/EN 62262)

Electromagnetic compatibility (EMC)

- Interference emission according to EN 61326, Class A equipment
- Interference immunity according to EN 61326; Annex A (Industrial) and NAMUR Recommendation NE21 (EMC)

Mechanical construction

Design, dimensions

Dimensions

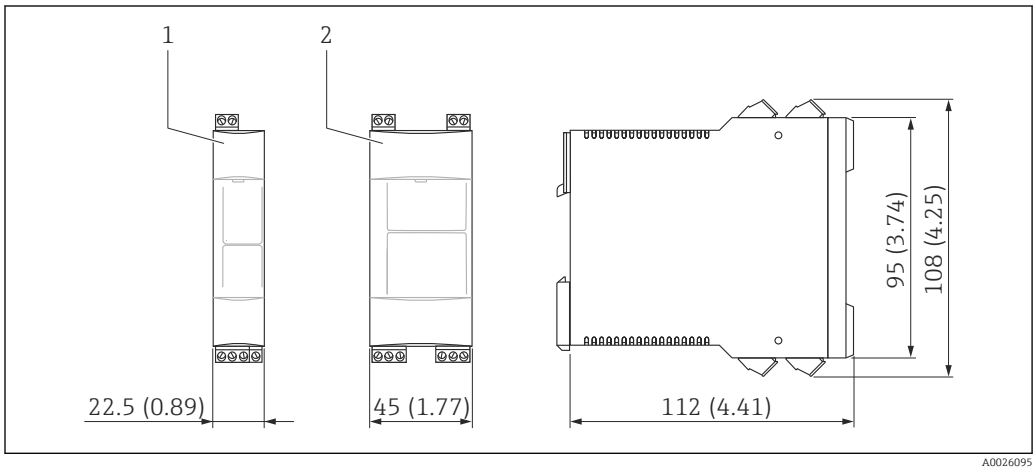

Dimensions mm (in)
1 1-channel Nivotester
2 3-channel Nivotester

Weight

- 1-channel: approx. 148 g (5.22 oz)
- 3-channel: approx. 250 g (8.81 oz)

Materials

- Housing: polycarbonate
- Front cover: PP polypropylene
- Fixing slide to secure to DIN rail: polyamide PA6

Terminals

1-channel

- 2 screw terminals: sensor power supply
- 3 screw terminals: level relay
- 2 screw terminals: fault-signaling relay
- 2 screw terminals: power supply

3-channel
- 3x2 screw terminals: sensor power supply, channel 1 to 3
- 3x3 screw terminals: level relay, channel 1 to 3
- 2 screw terminals: fault-signaling relay
- 2 screw terminals: power supply

Connection cross-section

Maximum 1 x 2.5 mm² (14 AWG) or 2 x 1.5 mm² (16 AWG)

Terminal assignment

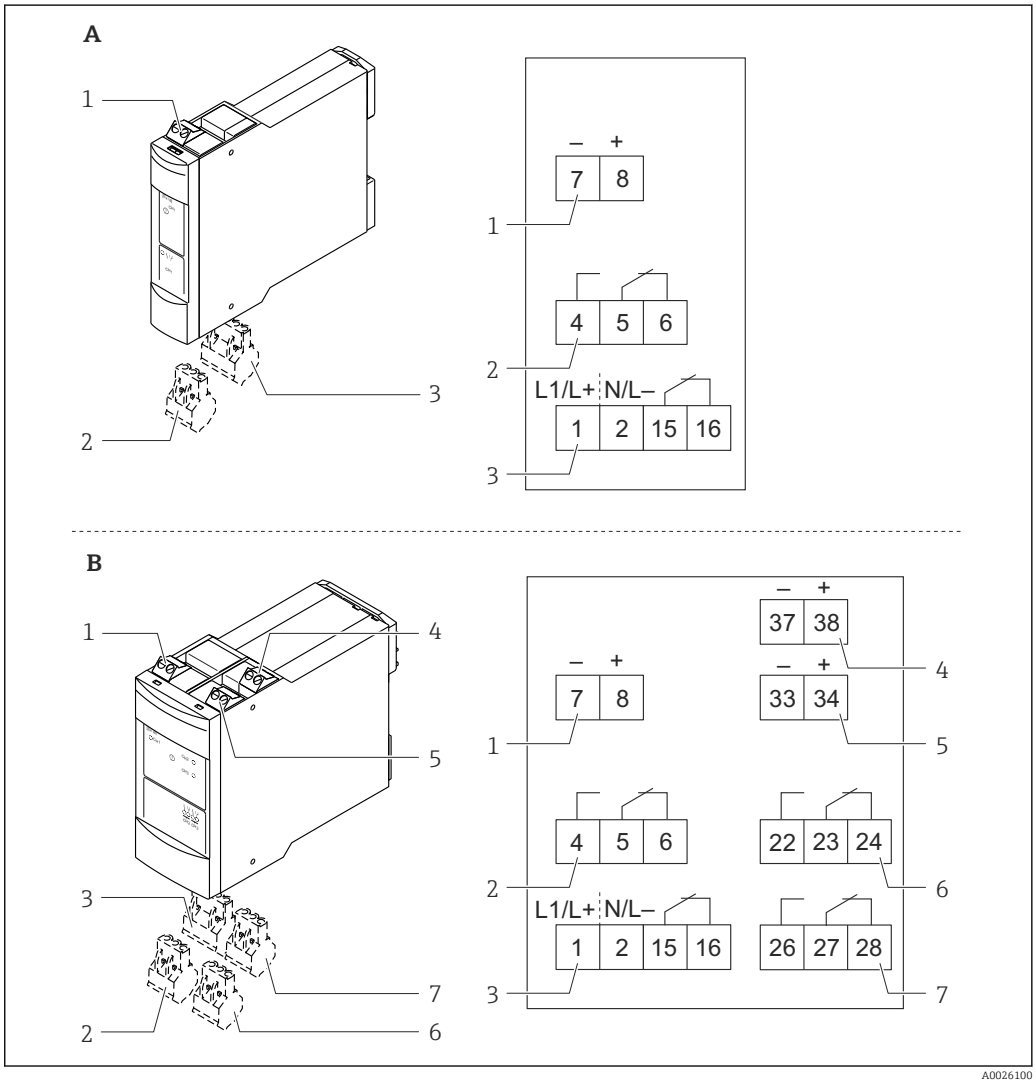

A 1-channel Nivotester
B 3-channel Nivotester
1 Sensor 1 (Ex ia)
2 Level relay 1
3 Power supply / fault-signaling relay
4 Sensor 3 (Ex ia)
5 Sensor 2 (Ex ia)
6 Level relay 2
7 Level relay 3

Operability

Operating concept

Onsite configuration with DIL switches behind fold-down front panel

Display elements

Light emitting diodes (LEDs)
- Green light emitting diode: operational
- One red LED per channel: fault signal
- One yellow LED per channel: level relay picked up

Operating elements

1-channel Nivotester

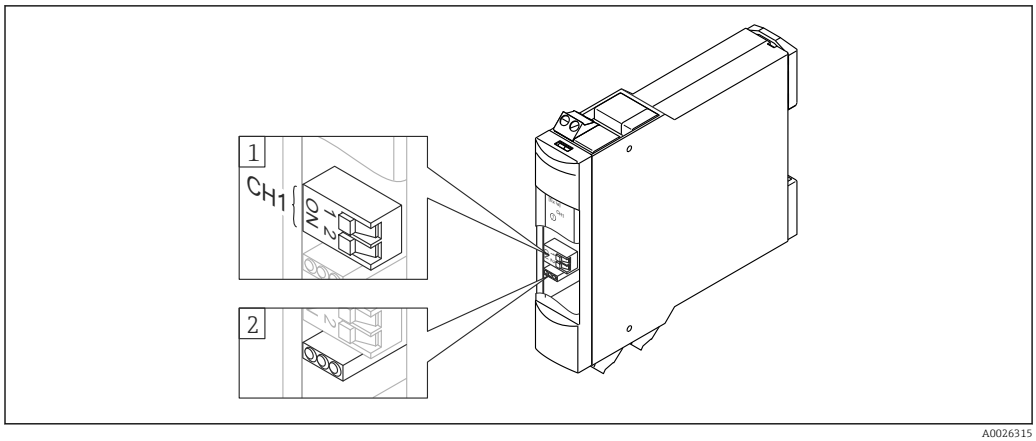

A0026315

1 DIL switch: MAX/MIN position (1), error on/off position (2)
2 Light emitting diodes (LEDs)

3-channel Nivotester

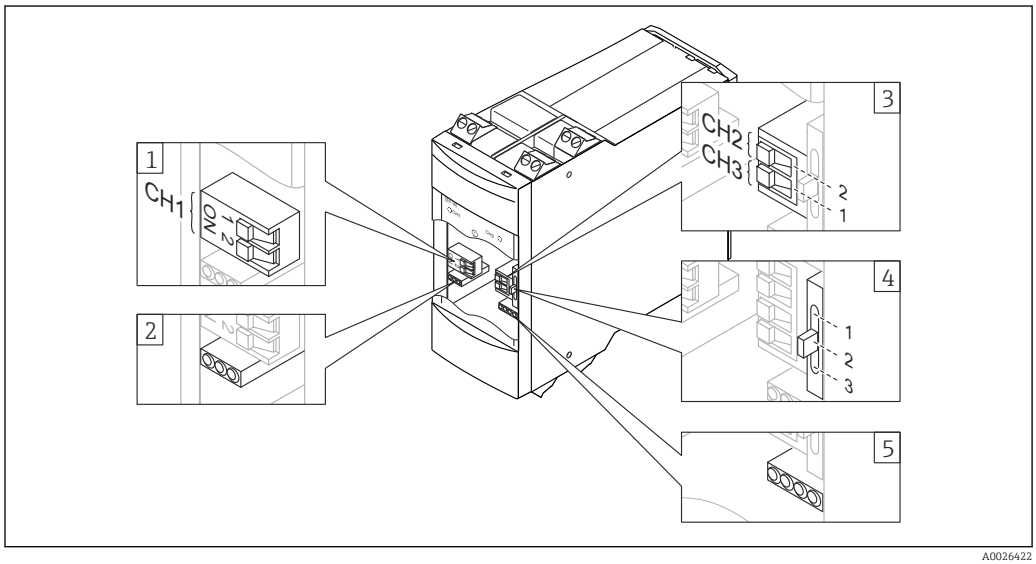

A0026422

1 DIL switch: MAX/MIN position (1), error on/off position (2)
2 Light emitting diodes (LEDs)
3 DIL switch: MAX/MIN position
4 Switch for functions: Δs, e.g. pump control (1), two level relays (2), individual channels (3)
5 Light emitting diodes (LEDs)

Certificates and approvals

CE mark

The measuring device is in conformity with the statutory requirements of the applicable EC Directives. These are listed in the corresponding EC Declaration of Conformity along with the standards applied.

Endress+Hauser confirms successful testing of the device by affixing to it the CE mark.

RCM-Tick mark

The measuring device complies with the EMC requirements of the "Australian Communications and Media Authority (ACMA)".

Ex approval

The Endress+Hauser sales center can provide information on the hazardous area versions currently available. All data relevant to explosion protection are provided in separate documents which can be supplied on request, "Supplementary documentation" section.

Type of protection

II(1)G [Ex ia Ga] IIC

II(1)D [Ex ia Da] IIIC

Overfill prevention

- WHG
- Leak approval

Other standards and guidelines

The applicable European guidelines and standards can be found in the relevant EU Declarations of Conformity.

- IEC/EN 60947-5-6: Low-voltage switchgear and control gear - DC interface for proximity sensors and switching amplifiers (NAMUR)
- IEC/EN 60721-3-3: Classification of environmental conditions
- IEC/EN 60529: Degrees of protection provided by enclosures (IP code)
- IEC/EN 61010: Safety requirements for electrical equipment for measurement, control and laboratory use
- IEC/EN 61326: Interference emission (class A equipment), interference immunity (Appendix A - Industrial)
- IEC 61508: Functional safety of safety-related electric/electronic/programmable electronic systems (E/E/PES)

Functional safety

SIL 1, SIL 2 or redundant SIL 3

Refer to the Functional Safety Manual , "Supplementary documentation" section!

Ordering information

Detailed ordering information is available from the following sources:

- In the Product Configurator on the Endress+Hauser website: www.endress.com → Select your country → Products → Select measuring technology, software or components → Select the product (picklists: measurement method, product family etc.) → Device support (right-hand column): Configure the selected product → The Product Configurator for the selected product opens.
- From your Endress+Hauser Sales Center: www.addresses.endress.com

Product Configurator - the tool for individual product configuration

- Up-to-the-minute configuration data
- Depending on the device: Direct input of measuring point-specific information such as measuring range or operating language
- Automatic verification of exclusion criteria
- Automatic creation of the order code and its breakdown in PDF or Excel output format
- Ability to order directly in the Endress+Hauser Online Shop

Accessories

Protective housing

The protective housing with IP66 ingress protection is equipped with an integrated DIN rail and is closed by a transparent cover which can also be lead-sealed.

- Dimensions in mm (in) B/H/D: 180/182/165 (7.1/7.2/6.5)
- Part number: 52010132

Supplementary documentation

Please see www.endress.com → download for the available documentation

71481670

www.addresses.endress.com

Endress+Hauser

People for Process Automation