TECHNICAL DATA

DesignMax DM8C
in-ceiling loudspeaker

PROFESSIONAL

Product Overview

With coaxial two-way drivers, the 150-watt DesignMax DM8C loudspeaker delivers powerful SPL suitable for foreground music — along with premium aesthetics that complement any commercial sound installation. The DM8C features a two-way, 8-inch woofer and a center-firing coaxial 1-inch compression driver, delivering a 52 Hz – 20 kHz frequency range. The in-ceiling DM8C is installed easily via QuickHold mounting arms.



Key Features

Combine DesignMax models to complete any design, big or small — 12 loudspeakers to mix and match, from 2-inch, low-profile models to 8-inch, high-SPL compression-driver loudspeakers and outdoor-rated options.

Deliver rich lows and clear, intelligible highs with coaxial two-way drivers — no DSP or EQ required. For even better sound, use select Bose DSPs and amplifiers to enable Bose loudspeaker EQ and SmartBass processing, which expands performance and response at any listening level.

Blend with any room design with elegant form factors, minimum-bezel grilles available in black or white, and removable logos.

Reduce installation time with the patented QuickHold mounting system, which also reduces strain, hassle, and the chance of product damage.

Install easily with industry-standard accessories — all models include Euroblock connectors; in-ceiling models include plenum-rated backcans, tile bridges, and front-access audio wiring that makes installation and troubleshooting easier.

Deliver high SPL for demanding applications, including high-ceiling venues such as ballrooms, concourse, and convention centers.

Technical Specifications

SINGLE LOUDSPEAKER PERFORMANCE		
Frequency Response (–3 dB) [1]	60 – 20,000 Hz	
Frequency Range (–10 dB) [1]	52 – 20,000 Hz	
Nominal Coverage Angle (1 – 4 kHz)	135° conical	
Nominal Coverage Angle (1 – 10 kHz)	120° conical	
	AES transducer test [4]	**Bose extended-lifecycle test [5]**
Power Handling, long-term continuous	150 W	125 W
Power Handling, peak	600 W	500 W
Sensitivity (SPL/ 1W @ 1 m) [2]	91 dB	91 dB
Calculated Maximum SPL @ 1 m [3]	113 dB	112 dB
Calculated Maximum SPL @ 1 m, peak	119 dB	118 dB
Crossover	1.5 kHz (passive 2-way crossover)	
Loudspeaker EQ	Not Required, Bose EQ voicing and SmartBass processing available	
Recommended High-Pass Protection	48 Hz with recommended 24 dB / octave filter	
Overload protection	Resistor-network power reduction with automatic reset	
Transformer taps	70V: 2.5, 5, 10, 20, 40, 80 W, bypass 100V: 5, 10, 20, 40, 80 W, bypass	
TRANSDUCERS		
Low Frequency	1 x 8-inch woofer (203 mm)	
High Frequency	1 x 1-inch compression driver, coaxial center-firing (25 mm)	
Nominal Impedance	8 ohms (transformer bypass)	

DesignMax DM8C
in-ceiling loudspeaker

PHYSICAL	
Enclosure Material	Engineered plastics front baffle with integrated steel formed backcan
Grille	Magnetically attached perforated steel, powder-coated finish, paintable, with safety-tether
Logo	Rotatable, removable
Color	Black: RAL 9005, White: Bose Arctic White, similar to RAL 9003, Paintable
Environmental	Indoor only
Safety Agency	UL-1480A, S5591/ UL Listed, in compliance with UL2043 for plenum-space installation, NFPA70 & NFPA90-A, CE compliant
Operating Temperature Range	0 °C to 50 °C (32 °F to 122 °F)
Connectors	Euroblock 6-pin connector with loop-through, front-baffle mounted. Accepts 18 AWG (0.8 mm^2) to 14 AWG (2.5 mm^2) size wire
Wire / Conduit Entry	Single top wire entry point allows for 9.5 mm (3/8 in) conduit
Suspension / Mounting	Three (3) QuickHold, spring-loaded long travel mounting arms plus three (3) safety cable locations
Product Dimensions (Grille Diameter × Depth)	409 × 255 mm (16.1 × 10.0 in)
Backcan Dimensions (Diameter × Depth)	340 × 240 mm (13.4 × 9.5 in)
Cutout size [Diameter]	349 mm (13.75 in)
Maximum Ceiling Thickness	76 mm (3.0 in)
Net Weight, Loudspeaker with Grille	9.6 kg (21.1 lb)
Net Weight, Tile Bridge	1.0 kg (2.2 lb)
Shipping Weight, Single	12.7 kg (28.0 lb)
Included Accessories	Adjustable Tile-Bridge, Template
Optional Accessories	Rough-in 6-pack for new construction
PRODUCT CODES	
802080-0110	DESIGNMAX DM8C SINGLE BLK
802080-0210	DESIGNMAX DM8C SINGLE WHT

Footnotes
(1) Frequency response and range measured on-axis in half-space environment with Bose EQ voicing
(2) Sensitivity measured on-axis in half-space environment averaged 100 Hz – 10 kHz using recommended High-Pass protection
(3) Maximum SPL calculated from sensitivity and power handling specifications, exclusive of power compression.
(4) AES standard 2-hour duration with IEC system noise
(5) Bose extended-lifecycle test using pink noise filtered to meet IEC268-5, 6-dB crest factor, 500-hour duration.
(6) Measured in whole-space conditions

For additional specifications and application information, please visit PRO.BOSE.COM.
Specifications subject to change without notice. 09/2020

DesignMax DM8C
in-ceiling loudspeaker

On-Axis Frequency Response

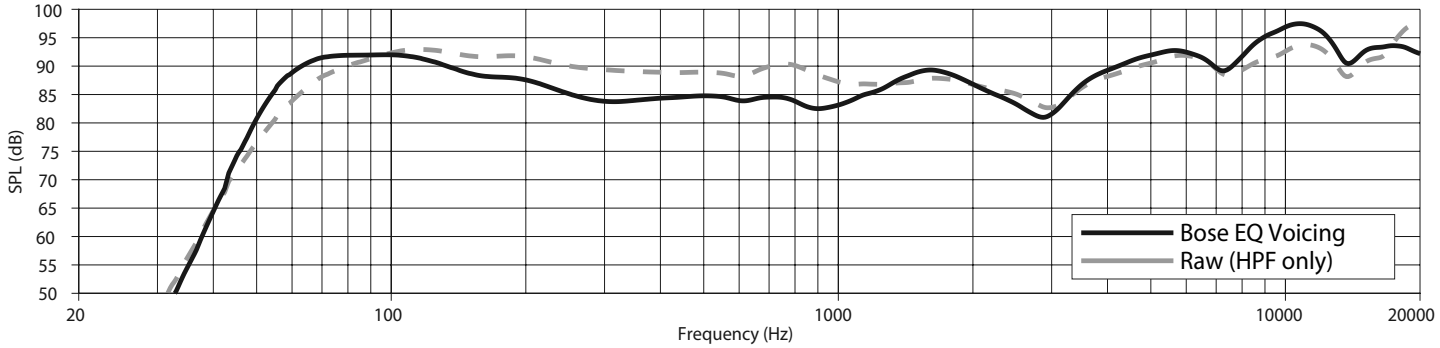

Impedance

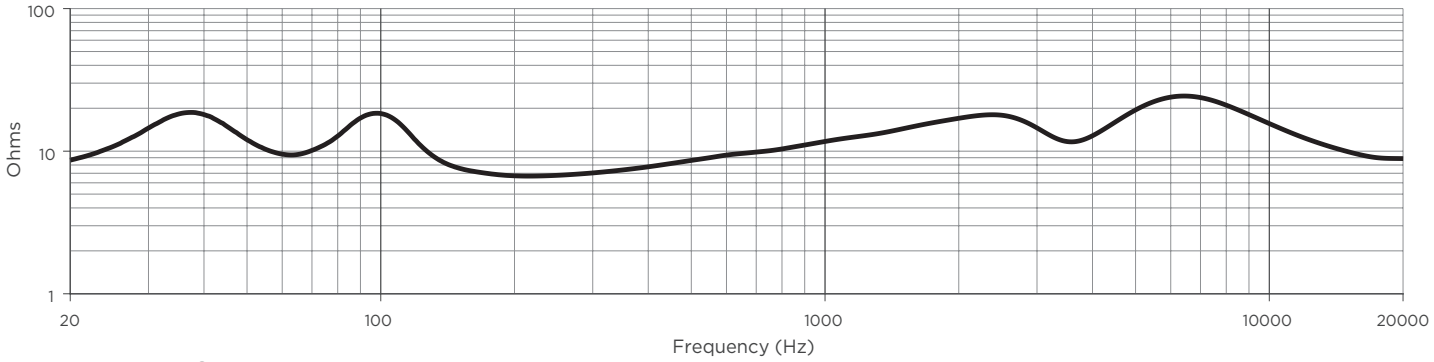

Beamwidth [6]

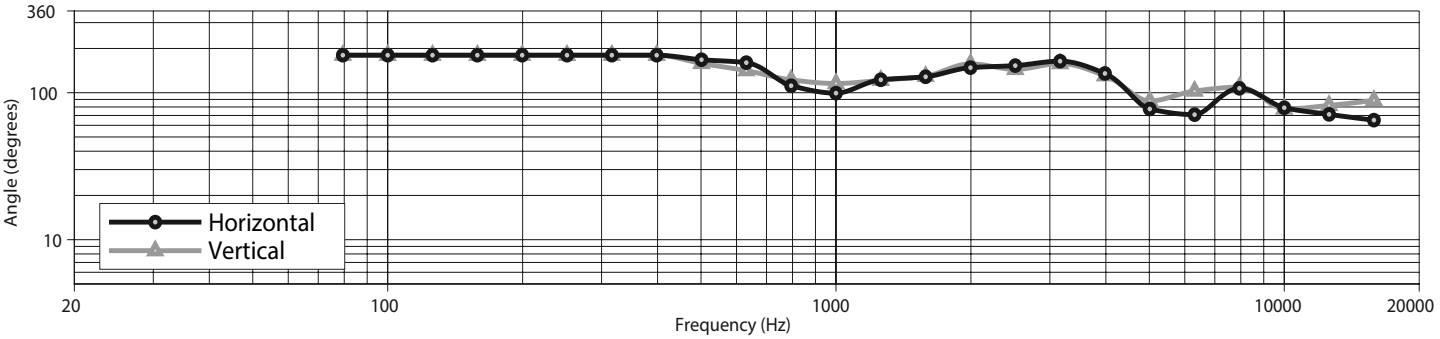

For additional specifications and application information, please visit PRO.BOSE.COM.
Specifications subject to change without notice. 09/2020

DesignMax DM8C
in-ceiling loudspeaker

Dimensions

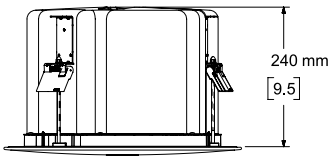

Side View

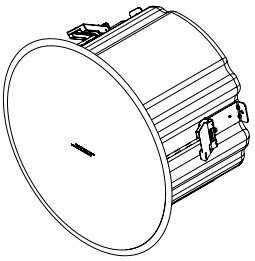

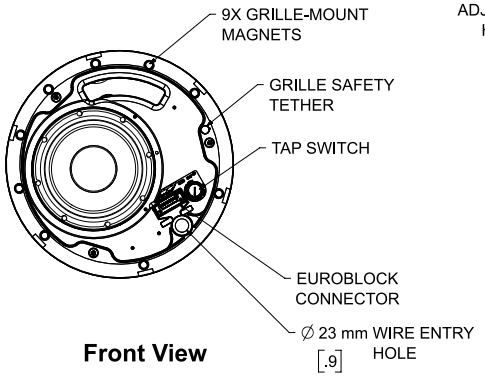

Front View

GRILLE REMOVED FOR CLARITY

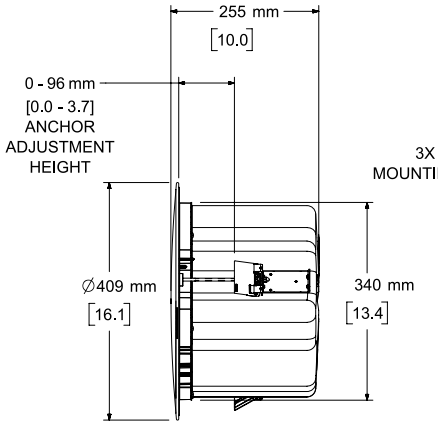

Right View

DIMENSIONS APPLY TO BOTH SIDES

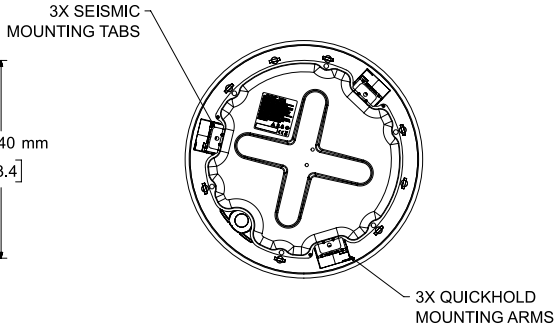

Rear View

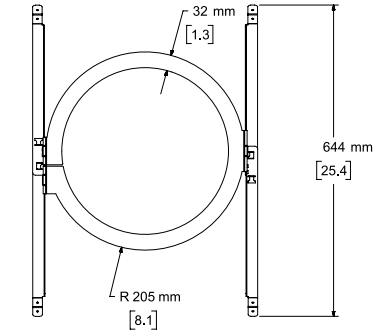

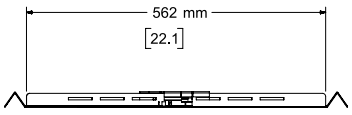

NOTES:
1. DIMENSIONS ARE IN MILLIMETERS OVER INCHES
2. WEIGHT APPROX 9.6kg [21.1lbs]

For additional specifications and application information, please visit PRO.BOSE.COM.
Specifications subject to change without notice. 09/2020