JUMO GmbH & Co. KG
Delivery address: Mackenrodtstraße 14,
36039 Fulda, Germany
Postal address: 36035 Fulda, Germany
Phone: +49 661 6003-0
Fax: +49 661 6003-607
E-mail: mail@jumo.net
Internet: www.jumo.net

JUMO Instrument Co. Ltd.
JUMO House
Temple Bank, Riverway
Harlow - Essex CM20 2DY, UK
Phone: +44 1279 63 55 33
Fax: +44 1279 63 52 62
E-mail: sales@jumo.co.uk
Internet: www.jumo.co.uk

JUMO Process Control, Inc.
8 Technology Boulevard
Canastota, NY 13032, USA
Phone: 315-697-JUMO
1-800-554-JUMO
Fax: 315-697-5867
E-mail: info@jumo.us
Internet: www.jumo.us

Indoor, outdoor and duct resistance thermometers

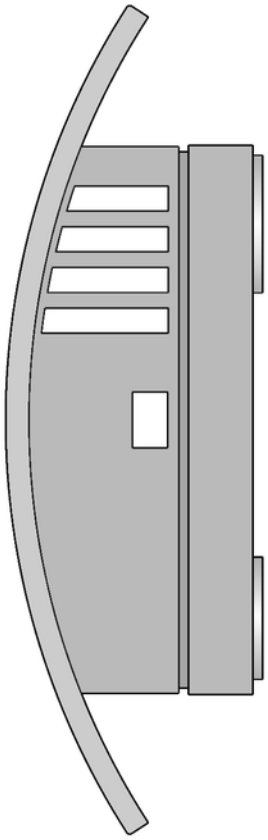

- **for temperatures from -30 to +80°C (200°C)**
- **for use in HVAC**
- **IP20 to IP65 protection**
- **for 2-wire, 3-wire or 4-wire connections**
- **fitted transmitter option 4 – 20mA or 0 – 10V**

Indoor, outdoor and duct resistance thermometers for HVAC applications are mainly used for temperature measurement in rooms, air ducts and outdoors.

Different instrument versions with plastic housings for different protection ratings are available to suit the particular measurement task.

The measuring insert is normally fitted with a Pt100 temperature sensor to EN 60 751, Class B, in 2-wire circuit. Versions with Pt500, Pt1000 or Ni 1000 can also be supplied. An extension in 3- or 4-wire circuit, starting from the terminals, is possible.
A transmitter can optionally be integrated.

Technical data

Terminal box	plastic PC housing (material PP on Type 902520/11), IP20 to IP65, Type 902520/25: IP54 and IP65 protection
Protection tube	stainless steel 1.4571; 5.4mm and 6mm dia.
Measuring insert	Pt100 temperature sensor, EN 60 751, Class B, 2-wire circuit
Transmitter	analog transmitter, output signal 4 – 20mA or 0 – 10V

JUMO GmbH & Co. KG
Delivery address: Mackenrodtstraße 14, 36039 Fulda, Germany
Postal address: 36035 Fulda, Germany
Phone: +49 661 6003-0
Fax: +49 661 6003-607
E-mail: mail@jumo.net
Internet: www.jumo.net

JUMO Instrument Co. Ltd.
JUMO House
Temple Bank, Riverway
Harlow - Essex CM20 2DY, UK
Phone: +44 1279 63 55 33
Fax: +44 1279 63 52 62
E-mail: sales@jumo.co.uk
Internet: www.jumo.co.uk

JUMO Process Control, Inc.
8 Technology Boulevard
Canastota, NY 13032, USA
Phone: 315-697-JUMO
1-800-554-JUMO
Fax: 315-697-5867
E-mail: info@jumo.us
Internet: www.jumo.us

Transmitter		**Output 4 – 20mA**	**Output 0 – 10V**
	Input		
	Measurement input	Pt100 (EN 60 751)	
	Sensor current	≤ 0.5mA	
	Sampling rate	continuous measurement because of analog signal path	
	Measurement circuit monitoring		
	Underrange	falling to ≤ 3.6mA	0V
	Overrange	rising to ≥ 22mA to < 28mA (24mA typical)	rising to ≥ 11V to < 14V (12V typical)
	Probe short circuit	≤ 3.6mA	0V
	Probe and lead break	≥ 22mA to < 28mA (24mA typical)	≥ 11V to < 14V (12V typical)
	Output		
	Output signal	proportional DC current 4 – 20mA	DC voltage 0 – 10V
	Transfer characteristic	linear with temperature	
	Transfer accuracy	≤ ±0.1%	≤ ±0.2%
	Damping of ripple on 24V supply voltage, amplitude 10V/50Hz, burden 470Ω/load 10MΩ	37dB	40dB
	Burden (Rb)	Rb = (Ub - 7.5V) / 22mA	-
	Burden error	≤ ±0.02% / 100Ω[1]	-
	Load/load error	-	≥ 10kΩ / ≤ ±0.1%
	Settling time on temperature change	≤ 10msec	
	Calibration conditions	24V DC / approx. 22°C	
	Calibration accuracy	≤ ±0.2%[1,2] or ≤ ±0.2°C	
	Overall accuracy: sensor/calibration	±0.4°C (typical) at 20°C / 24V supply voltage	
	Supply		
	Supply voltage (Ub)	7.5 – 30V DC	15 – 30V DC
	Reverse polarity protection	yes	
	Supply voltage error	≤ ±0.01% per V deviation from 24V[1]	
	Ambient conditions		
	Operating temperature range	-40 to +85°C	
	Storage temperature range	-40 to +100°C	
	Temperature error	≤ ±0.01% per °C deviation from 22°C[1]	
	Climatic conditions similar to EN 60 654, Class C1	relative humidity ≤ 95% annual mean, no condensation	
	EMC interference emission/immunity	EN 61 326, Class B / to industrial requirements	

1. All data refer to the end-of-range value 20mA. 2. The larger value applies.

Connection example with supply unit, 4 – 20mA output

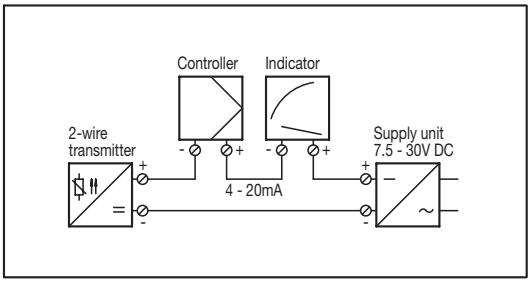

Connection example with supply unit, 0 – 10V output

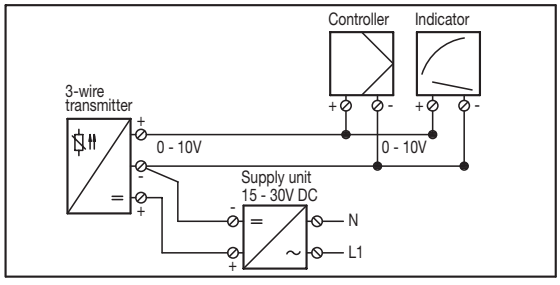

Connection diagram

Output 4 - 20mA

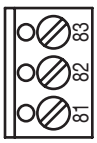

Connection for		Terminal		
Supply voltage 7.5 - 30V DC	+ 81	$R_B = \frac{U_b - 7.5V}{22mA}$	81	82
Current output 4 - 20mA	- 82	R_B = burden resistance U_b = supply voltage	+	-

Output 0 - 10V

Connection for	Terminal			
Supply voltage 15 - 30V DC	+ 81 - 82	Load ≥ 10kΩ	81	82 83
Voltage output 0 - 10V	- 82 + 83		+	- +

JUMO GmbH & Co. KG
Delivery address: Mackenrodtstraße 14,
36039 Fulda, Germany
Postal address: 36035 Fulda, Germany
Phone: +49 661 6003-0
Fax: +49 661 6003-607
E-mail: mail@jumo.net
Internet: www.jumo.net

JUMO Instrument Co. Ltd.
JUMO House
Temple Bank, Riverway
Harlow - Essex CM20 2DY, UK
Phone: +44 1279 63 55 33
Fax: +44 1279 63 52 62
E-mail: sales@jumo.co.uk
Internet: www.jumo.co.uk

JUMO Process Control, Inc.
8 Technology Boulevard
Canastota, NY 13032, USA
Phone: 315-697-JUMO
1-800-554-JUMO
Fax: 315-697-5867
E-mail: info@jumo.us
Internet: www.jumo.us

Dimensions

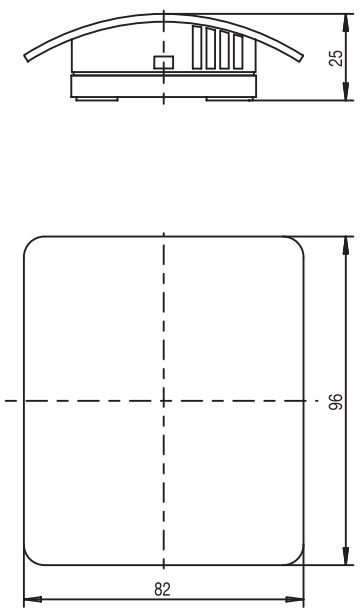

Type 902520/10

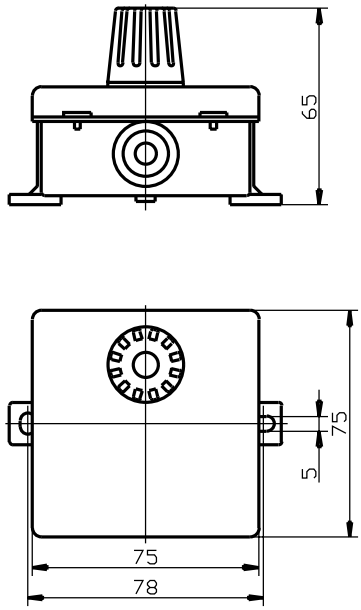

Type 902520/11

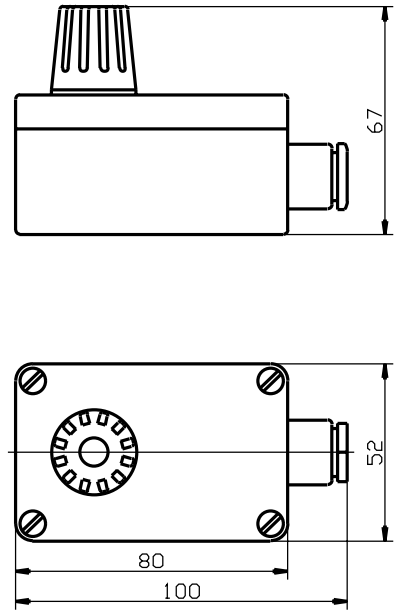

Type 902520/12

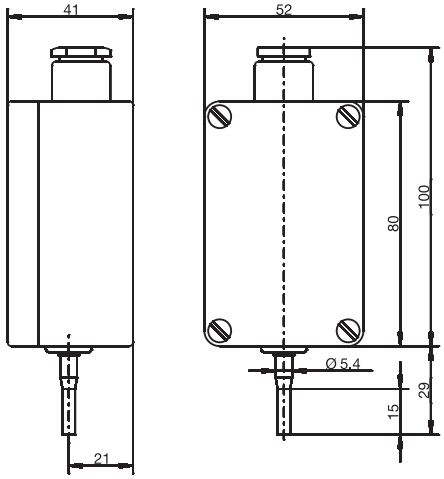

Type 902520/13

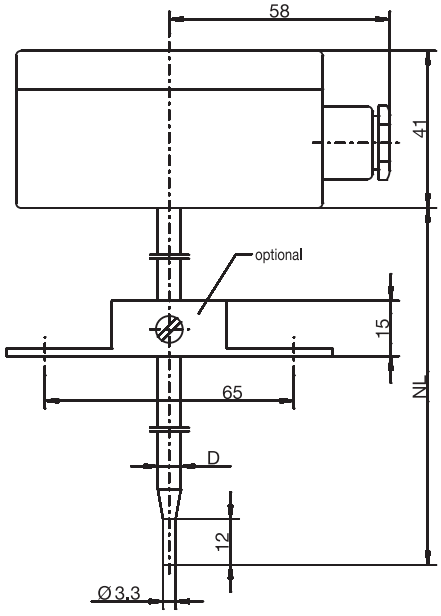

Type 902524/20

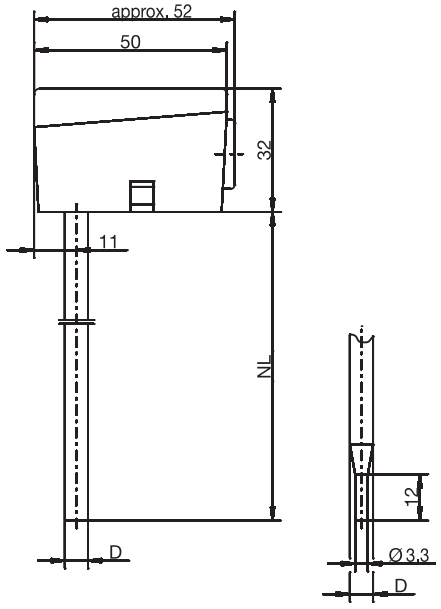

Type 902524/25

JUMO GmbH & Co. KG
Delivery address: Mackenrodtstraße 14,
36039 Fulda, Germany
Postal address: 36035 Fulda, Germany
Phone: +49 661 6003-0
Fax: +49 661 6003-607
E-mail: mail@jumo.net
Internet: www.jumo.net

JUMO Instrument Co. Ltd.
JUMO House
Temple Bank, Riverway
Harlow - Essex CM20 2DY, UK
Phone: +44 1279 63 55 33
Fax: +44 1279 63 52 62
E-mail: sales@jumo.co.uk
Internet: www.jumo.co.uk

JUMO Process Control, Inc.
8 Technology Boulevard
Canastota, NY 13032, USA
Phone: 315-697-JUMO
1-800-554-JUMO
Fax: 315-697-5867
E-mail: info@jumo.us
Internet: www.jumo.us

Order details: Indoor, outdoor and duct resistance thermometers

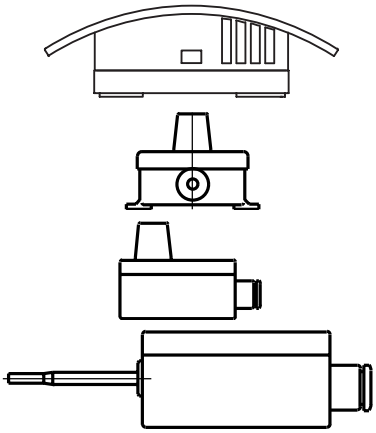

					(1) Basic version
				902520/10	Indoor resistance thermometer, Protection IP20
				902520/11	Indoor and outdoor resistance thermometer, Protection IP54
				902520/12	Indoor and outdoor resistance thermometer, Protection IP65
				902520/13	Indoor and outdoor resistance thermometer with stepped protection tube, Protection IP65
					(2) Operating temperature in °C
		x	x	568	-30 to +60°C (range only in conjunction with extra code 330 or 333)
x		x	x	572	-30 to +80°C (standard)
	x			635	-20 to +80°C (standard)
x		x	x	803	0 to 40°C (range only in conjunction with extra code 330 or 333)
x		x	x	807	0 to 60°C (range only in conjunction with extra code 330 or 333)
					(3) Measuring insert
x			x	1001	1 x Pt100 in 3-wire circuit
x	x	x	x	1003	1 x Pt100 in 2-wire circuit
x	x	x	x	1005	1 x Pt1000 in 2-wire circuit
x	x	x	x	1009	1 x Ni 1000 in 2-wire circuit
x				2001	2 x Pt100 in 3-wire circuit
	x	x	x	2003	2 x Pt100 in 2-wire circuit
					(4) Tolerance class to EN 60 751
x	x	x	x	1	Class B (standard)
x			x	2	Class A (not for Type 902520/10 in conjuction with transmitter)
x			x	3	Class 1/3 DIN (not for Type 902520/10 in conjunction with transmitter)
					(5) Extra codes
x	x	x	x	000	no extra code
x		x	x	330	analog transmitter, 4 – 20mA[2] output (in conjunction with 1 x Pt100)
x		x	x	333	analog transmitter, 0 – 10V[2] output (in conjunction with 1 x Pt100)

	(1)		(2)		(3)		(4)		(5)	
Order code		-		-		-		/		,...
Order example	902520/10	-	572	-	1001	-	1	/	000[1]	

1. List extra codes in sequence, separated by commas.
2. Please specify range in plain text.

JUMO GmbH & Co. KG
Delivery address: Mackenrodtstraße 14, 36039 Fulda, Germany
Postal address: 36035 Fulda, Germany
Phone: +49 661 6003-0
Fax: +49 661 6003-607
E-mail: mail@jumo.net
Internet: www.jumo.net

JUMO Instrument Co. Ltd.
JUMO House
Temple Bank, Riverway
Harlow - Essex CM20 2DY, UK
Phone: +44 1279 63 55 33
Fax: +44 1279 63 52 62
E-mail: sales@jumo.co.uk
Internet: www.jumo.co.uk

JUMO Process Control, Inc.
8 Technology Boulevard
Canastota, NY 13032, USA
Phone: 315-697-JUMO
1-800-554-JUMO
Fax: 315-697-5867
E-mail: info@jumo.us
Internet: www.jumo.us

Order details: Indoor, outdoor and duct resistance thermometers

(1) Basic version

902524/20 Duct resistance thermometer with stepped protection tube, Protection IP65

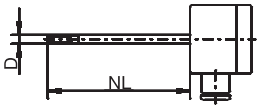

902524/25 Duct resistance thermometer with plain protection tube, Protection IP54

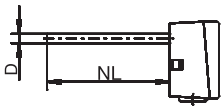

			(2) Operating temperature in °C
	x	380	-50 to +200°C (standard)
x		568	-30 to +60°C (range only in conjunction with extra code 330 or 333)
x		572	-30 to +80°C (standard)
x		807	0 to 60°C (range only in conjunction with extra code 330 or 333)
			(3) Measuring insert
x	x	1003	1 x Pt100 in 2-wire circuit
x	x	1005	1 x Pt1000 in 2-wire circuit
x	x	1009	1 x Ni 1000 in 2-wire circuit
x		2003	2 x Pt100 in 2-wire circuit
			(4) Tolerance class to EN 60 751
x	x	1	Class B (standard)
x	x	2	Class A
x		3	Class 1/3 DIN
			(5) Protection tube diameter D in mm
x	x	6	6mm (Type 902524/20: stepped down from 6mm dia. to 3.3mm dia.)
			(6) Nominal length NL in mm (50≤ NL ≤500)
x	x	100	100mm
	x	150	150mm
	x	200	200mm
	x	...	please specify in plain text (in 50mm steps)
			(7) Process connection
x	x	000	no process connection
x	x	252	screwed pipe joint G 1/4 (1/4" pipe)
x	x	254	screwed pipe joint G 1/2 (1/2" pipe)
x	x	662	stop flange 6mm dia.
			(8) Extra codes
x	x	000	no extra code
	x	310	protection tube stepped down from 6mm dia. to 3.3mm dia.
x		330	analog transmitter, 4 – 20mA[2] output (in conjunction with 1 x Pt100)*
x		333	analog transmitter, 0 – 10V[2] output (in conjunction with 1 x Pt100)*
	x	404	Protection IP65

	(1)		(2)		(3)		(4)		(5)		(6)		(7)		(8)	
Order code		-		-		-		-		-		-		/		,...
Order example	902524/20	-	572	-	1003	-	1	-	6	-	100	-	252	/	000[1]	

1. List extra codes in sequence, separated by commas.
2. Please specify range in plain text

JUMO GmbH & Co. KG
Delivery address: Mackenrodtstraße 14,
36039 Fulda, Germany
Postal address: 36035 Fulda, Germany
Phone: +49 661 6003-0
Fax: +49 661 6003-607
E-mail: mail@jumo.net
Internet: www.jumo.net

JUMO Instrument Co. Ltd.
JUMO House
Temple Bank, Riverway
Harlow - Essex CM20 2DY, UK
Phone: +44 1279 63 55 33
Fax: +44 1279 63 52 62
E-mail: sales@jumo.co.uk
Internet: www.jumo.co.uk

JUMO Process Control, Inc.
8 Technology Boulevard
Canastota, NY 13032, USA
Phone: 315-697-JUMO
1-800-554-JUMO
Fax: 315-697-5867
E-mail: info@jumo.us
Internet: www.jumo.us

Stock versions

(1)		(2)		(3)		(4)		(5)	Sales No.
902520/10	-	572	-	1001	-	1	/	000	90/00065671
902520/10	-	803	-	1003	-	1	/	330 (0 to 40°C)	90/00064003
902520/10	-	807	-	1003	-	1	/	330 (0 to 60°C)	90/00065717
902520/11	-	635	-	1003	-	1	/	000	90/00055723
902520/12	-	572	-	1003	-	1	/	000	90/00064881
902520/12	-	807	-	1003	-	1	/	330 (0 to 60°C)	90/00064883
902520/13	-	572	-	1003	-	1	/	000	90/00419733
902520/13	-	572	-	2003	-	1	/	000	90/00419734
902520/13	-	568	-	1003	-	1	/	330 (-30 to +60°C)	90/00419736

(1)		(2)		(3)		(4)		(5)		(6)		(7)		(8)	Sales No.
902524/20	-	572	-	1003	-	1	-	6	-	100	-	662	/	000	90/00064894
902524/20	-	568	-	1003	-	1	-	6	-	100	-	662	/	330 (-30 to +60°C)	90/00065087