

UNIFLEX CI 45

Universal transmitter

Compact design
Display & operating functions
Communication features
High resolution
Fast cycle times
Two universal inputs & universal output
Two relay outputs
Counter/ frequency input, frequency output
Customer-specific linearization
Measurement value correction
Min/max indicator ('slave pointer')

rail line

FEATURES

- Compact design, only 22,5 mm wide
- Clips onto top-hat DIN rail
- Plug-in screw terminals or spring-clamp connectors
- Dual-line LC display with additional display elements
- Process values always in view
- Convenient 3-key operation
- Direct communication between mounted transmitters, fieldbus connections via bus coupler
- Up to two universal inputs with high signal resolution (>15 bits)
- Universal output with high resolution (14 bits) as combined voltage/current output
- One or two relay outputs
- combined counter or frequency input, frequency output
- Quick response; only 100 ms cycle time, i.e. also suitable for fast signals
- Customer-specific linearization
- Measurement value correction (offset or 2-point)
- Min/max indicator ('slave pointer')
- Logical linking of digital outputs, e.g. for common alarms
- Preset for output value

APPLICATIONS

- Measurement, scaling, and separation of electrical signals, e.g. for:
- Heat treatment plants
- Drying equipment
- Furnace builders
- Metallurgy
- Kilns
- General machine building
- Research and development
- Speed control, flow measuring, event counting, energy consumption collecting
- etc.

DESCRIPTION

UNIFLEX CI 45 transmitters are designed to give precise and cost-effective signal detection and processing tasks.

Every CI 45 has at least one universal input, one universal output and a relay.

Optionally, the transmitter can be fitted with an additional relay, with a second universal input and counter or frequency input. Optionally, the voltage output can also be used as frequency output.

Galvanic isolation is provided between inputs and outputs as well as from the supply voltage and the communication interfaces.

Mounting

The compact CI 45 is clipped onto a top-hat DIN rail, and can also be unmounted very simply.

All connections are of the plug-in type, so that a transmitter can be replaced very quickly without disturbing the wiring.

Display and operation

The two-line LC display permits simultaneous indication of the measured value and all of the unit's operating functions.

Moreover, a LED and 4 other display elements give a reliable indication of operating status, operating mode, and error messages.

The user-configurable engineering unit of the measured value can be included in the display. By means of the extended Operating Level, it is possible to show any signal or parameter in the 2nd display line.

Interfaces and Engineering Tools

The transmitter settings are also configurable by means of an Engineering Tool.

Via the BlueControl® software, including the transmitter simulation and especially the convenient connection via the BluePort® front interface, the

user can solve the task in hand without having to work through operating instructions.
Of course, practically all settings can also be made from the device front.

Moreover, the CI 45 can exchange data with superordinate systems and PCs via an optional RS 485 interface with MODBUS RTU protocol that is fitted into the top-hat DIN rail.

Devices with option system interface can be connected via bus coupler to fieldbusses.

Password protection

If required, unauthorized access to the various Operating Levels can be prevented with a password, or an entire level can be blocked.

TECHNICAL DATA

INPUTS

Survey of inputs

Input	Purpose
INP1	X1 (process value 1), universal input
INP2 (option)	X2 (process value 2), universal input
di1	Operation disabled; Reset of stored alarms; Reset of min/max indicator.
di1 (option)	Counter or frequency input

Input values can also be forced via interface.

UNIVERSAL INPUT INP1

Resolution: > 15 bits
Decimal point: 0 to 3 decimals
Digital input filter: adjustable 0.0...999.9 s
Scanning cycle: 100 ms (only INP1) 140 ms (INP1 + INP2)
Linearization: 31 segments, adaptable with BlueControl®
Measurement value correction: 2-point or offset
Limiting frequency: 1,7 Hz

Thermocouples (Table 1)

Input resistance: ≥ 1 MΩ
Influence of source resistance: 1 µV/Ω
Input circuit monitor: sensor break, polarity

Cold-junction compensation

- Internal
  - additional error: typical ≤± 0.5 K
    max. ≤ +1.2 K
- External:
  - value setting: 0 ...100 °C
  - measured via INP2 (option)

Break monitoring

Sensor current: ≤ 1 µA

Operating sense configurable

Resistance thermometer (Table 2)

Connection technique: 3-wire or 4-wire (not available if using INP2)
Lead resistance: (max. at range end) max. 30 Ω
Input circuit monitoring: break and short circuit

Measurement span

Separated into ranges
Physical measurement range: 0...4,500 Ω

Table 1: Thermocouple input

Thermocouple type		Measurement range		Error	Typical resol.
L	Fe-CuNi (DIN)	-100...900°C	-148...1652°F	≤ 2K	0,05 K
J	Fe-CuNi	-100...1200°C	-148...2192°F	≤ 2K	0,05 K
K	NiCr-Ni	-100...1350°C	-148...2462°F	≤ 2K	0,1 K
N	Nicrosil/Nisil	-100...1300°C	-148...2372°F	≤ 2K	0,1 K
S	PtRh-Pt 10%	0...1760°C	32...3200°F	≤ 2K	0,1 K
R	PtRh-Pt 13%	0...1760°C	32...3200°F	≤ 2K	0,1 K
T**	Cu-CuNi	-200...400°C	-328...752°F	≤ 2K	0,03 K
C	W5%Re-W26%Re	0...2315°C	32...4199°F	≤ 3K	0,2 K
D	W3%Re-W25%Re	0...2315°C	32...4199°F	≤ 3K	0,2 K
E	NiCr-CuNi	-100...1000°C	-148...1832°F	≤ 2K	0,05 K
B *	PtRh-Pt6%	0(400)...1820°C	32(752)...3308°F	≤ 3K	0,2 K
Special		-25 … 75 mV		≤ 0,1%	0,005%

** Values apply from 400°C upwards.*
***Values apply from -80°C upwards.*

Table 2: Resistive inputs

Type	Sensor current	Measurement range		Error	Typical resol.
Pt100 ***	≤ 0,25mA	-200...100 (150)°C	-328...212 (302)°F	≤ 1 K	0,05 K
Pt100		-200...850°C	-328...1562°F	≤ 1 K	0,05 K
Pt1000		-200...850°C	-328...1562°F	≤ 2 K	0,05 K
KTY 11-6*		-50...150°C	-58...302°F	≤ 2 K	0,05 K
Special*		0...4500 Ω**		≤ 0,1%	0,005%
Special		0...450 Ω**		≤ 0,1%	0,005%
Potentiom.		0...160 Ω**		≤ 0,1%	0,005%
Potentiom.		0...450 Ω**		≤ 0,1%	0,005%
Potentiom.		0...1600 Ω**		≤ 0,1%	0,005%
Potentiom.		0...4500 Ω**		≤ 0,1%	0,005%

** Default setting is the characteristic for KTY 11-6 (-50...150°C)*
*** Including lead resistance*
**** up to 150 °C at reduced lead resistance (max. 160 Ω)*

Table 3: Current and voltage input

Measurement range	Input resistance	Error	Typical resol.(∅)
0...10 V	≈ 110 kΩ	≤ 0,1 %	0,3 mV
-10...10 V	≈ 110 kΩ	≤ 0,1 %	0,6 mV
-5...5 V	≈ 110 kΩ	≤ 0,1 %	0,3 mV
-2,5...115 mV*	> 1 MΩ	≤ 0,1 %	4 µV
-25...1150 mV*	> 1 MΩ	≤ 0,1 %	40 µV
-25...90 mV*	> 1 MΩ	≤ 0,1 %	4 µV
-500...500 mV*	> 1 MΩ	≤ 0,1 %	40 µV
-200...200 mV*	> 1 MΩ	≤ 0,1 %	20 µV
0...20 mA	20 Ω	≤ 0,1 %	0,8 µA

** For INP1: high-impedance, without break monitoring*
for INP2: high impedance, break monitoring always active

The BlueControl® software enables the internal characteristic curve for the KTY 11-6 temperature sensor to be adapted.

Current and voltage measurement (Table 3)

Span start and span:	anywhere within the measurement range
Scaling:	freely selectable –1999...9999
Input circuit monitoring (current):	12,5% below span start (2 mA)

O_2- measuring (option)

EMI-measuring by means of INP1 (high-impedance mV-inputs) suitable for probes with

– constant sensor temperature (heated probes), setting by means of parameter

– measured sensor temperature (non-heated probes), measuring by means of INP2

ADDITIONAL INPUT INP2 (UNIVERSAL, OPTION)

Resolution:	>15 bits
Digital input filter:	adjustable, 0.0...9,999 s
Scanning cycle:	140 ms
Linearization:	as for INP1
Measurement value correction:	2-point or offset
Type:	single-ended except thermocouples

Thermocouples (Table 1)

Cold-junction compensation

- Internal
  - additional error:
    typical: ≤± 0.5 K
    max.: ≤ -2.5 K
- External 0...100 °C

Remaining technical data as for INP1.

Resistive sensors (Table 2)

Connection technique: 3-wire

Measurement span

Remaining technical data as for INP1.

Current and voltage measurement (Table 3)

Remaining technical data as for INP1 except:

- Voltage input ranges –10 / 0...+10V and -5...+5V not possible.
- Millivolt input ranges: break monitoring always active.

CONTROL INPUT DI1

Model with

a) Contact input

Connection of potential-free contact that is suitable for switching 'dry' circuits.

Switched voltage:	5 V
Switched current:	1 mA

b) Optocoupler input

For active control signals.

Nominal voltage:	24 V DC, external supply
Logic '0':	-3...5 V
Logic '1':	15...30 V
Current demand:	max. 6 mA

Control input

Configurable as direct or inverse switch or contact.

functions:	Locking front operating, resetting of latched alarms, slave pointers, integrator; activating tare-, sample&hold function; switchover between inputs

Counter input (option)

Pulse counter for up or down counting, non storing

active edge:	configurable
Count register:	31 bit
Display range:	adjustable via counter divider, 8-digit splitted to 2 lines
Counter dvider:	adjustable, 0.1...9,999
Counter start value:	adjustable
Counter end value:	adjustable; signalling on output
Counter processing:	each 100 ms (at add. INP2 measuring 140 ms)
Resetting:	via front key combination, limit

Counter input with option contact

Count frequency, max.:	5 Hz at square 1:1
Pulse duration, min.:	100ms

Counter input with option optocoupler

Count frequency, max.:	100 kHz at square 1:1
Pulse duration, min.:	5µs

Effects to active transmitters connected to INP1, INP2 can occur.

Frequenzcy input (option)

Input with option optocoupler

Frequency range:	0...100 kHz at square 1:1
Gate time:	adjustable, 0.1... 20s
Process value:	scalable

Effects to active transmitters connected to INP1, INP2 can occur.

OUTPUTS

SURVEY OF OUTPUTS

Output	Purpose
OUT1 OUT2 (relay)	Limit contact, alarms, counter end value, errors, status messages *
OUT3 (logic)	Same as OUT1 and OUT2
OUT3 (continuous)	Analog output for display value, INP1, INP2, frequency value or counter value Transmitter supply 13 V / 22 mA
OUT3 (U)	Frequency output (option)

* All logic signals can be "OR-linked". Output values can also be forced via interface.

RELAY OUTPUTS OUT1, OUT2

Type:	2 NO contacts with a common terminal
Max. contact rating:	500 VA, max. 250 V, max. 2 A at 48...62 Hz, resistive load
Min. contact rating:	6V, 1 mA DC
Switching cycles (electrical):	for I=1A/2A: ≥ 800.000/500.000 (at 250V AC, resistive load)

Note:

If the relays OUT1 and OUT2 are used to operate external contactors, these must be fitted with RC snubber circuits to manufacturer specifications to prevent excessive voltage peaks at switch-off.

OUT3 AS UNIVERSAL OUTPUT

Parallel current/voltage output with common 'minus' terminal (combined use only in galvanically isolated circuits).

Freely scalable

Resolution:	14 bits
Dynamic response (step change of input signal) T90:	Output follows the input: ≤ 540 ms
Tracking error I/U:	≤ 2 %
Residual ripple: (rel. to range end)	≤±1 % 0...130 kHz

Current output

0/4...20 mA, configurable.
short circuit proof

Dynamic range:	-0,5...23 mA

Load:	≤ 700 Ω
Load effect:	≤ 0,02%
Resolution:	≤ 1,5 µA
Error:	≤ 0,1%

Voltage output

0/2...10V, configurable
not continuous short-circuit proof

Dynamic range:	-0,15...11,5 V
Load:	≥ 2 kΩ
Load effect:	≤ 0,06%
Resolution:	≤ 0,75 mV
Error:	≤ 0,1%
Additional error when using simultaneously the current output	≤ 0,09%

OUT3 as transmitter supply

Output:	22 mA / ≥ 13 V DC

OUT3 as logic signal

Load ≤ 700 Ω	0/≤ 23 mA
Load > 500 Ω	0/> 13 V

Frequency output

Output by means of voltage output

frequency range:	0, 0.25...1000 Hz (square wave)
Output value:	adjustable
Level:	0 / 11.5V

Pulse output

by means of integrator with automatic resetting

frequency range:	0...5 Hz max. 5 Imp/s
Puls duration:	100ms (INP1 measuring) 140ms (INP1 + INP2 measuring)

GALVANIC ISOLATION

Galvanic isolation is provided between inputs and outputs as well as from the supply voltage (3-port-isolation).

Fig. 1: Galvanic isolation

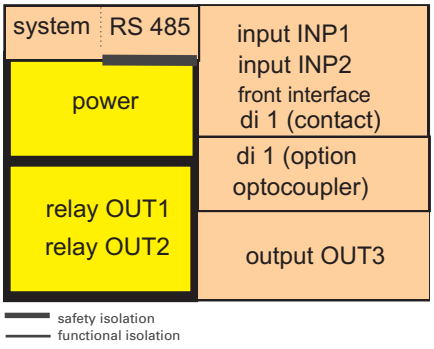

Test voltage:

Between power supply and in-/outputs:	2.3 kV AC, 1 min
Between input and output:	500 V AC; 1min

Fig. 2: Connecting diagram CI 45

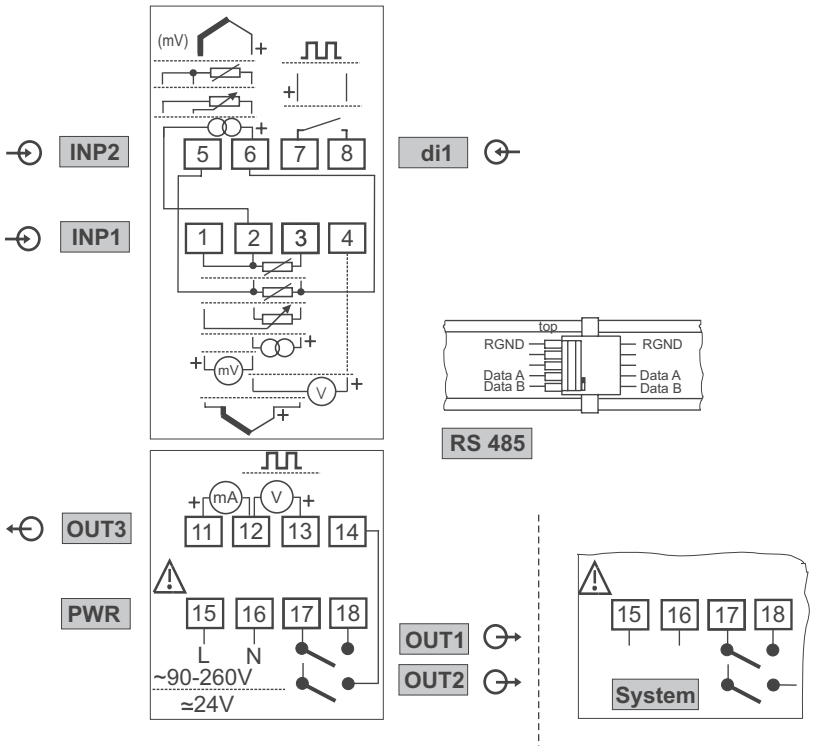

Isolation:

between in-/output against earth:	≤ 33 V AC

FUNCTIONS

Process value functions

- Standard (process value X1)

Optionally:

- Difference control (X1 – X2)
- Max. value selection from X1, X2
- Min. value selection from X1, X2
- Mean value selection from X1, X2
- Switchover between X1 and X2
- Oxygen measurement* with measured or constant sensor temperature
- Counter / frequency measuring
- process value via INP1, CJC via INP2

** Precise determination of O2 content by means of Nernst equation.*

Signal processing

The selected input signal is converted into an analog output signal or is accessible at the interface. Depending on the selected sensor type, the following options are provided for manipulating the input signal:

- Measurement value correction (offset and 2-point)
- Scaling
- 1st-order filter with adjustable parameters (bandwidth, see below)
- Linearization with 31 segments
- √x , with √-x = 0
- x^2
- Integrator

Behaviour on sensor break/short circuit

- Response of the analog output is selectable (upscale / downscale)
- Preset substitute input value, can be disabled

Sample&Hold amplifier (option)

The sample-and-hold amplifier stores input signals which are only present for a short time.
Typical applications are: storage of discontinuous set-values, and storage of signals in the case of a fault in the signal source.

Tare function (option)

Setting the tare signal the actual process value is reset to zero. Further measurements work with the offset, e.g. to subtract the tare weight.

Min/max indicator (slave pointer)

The minimum and maximum input values are stored in the CI 45, and can be displayed by means of the keys ▼ (minimum) and ▲ (maximum). The values are resettable.

Display of engineering units

The engineering unit for the measured value can either be selected from a predefined list of standard units, or it can be defined by the user (BlueControl®). The unit appears in the second line of the display.

FILTER

The transmitter contains a 1st-order mathematical filter with adjustable time constant and bandwidth.
The bandwidth is the adjustable tolerance range within which the filter is active above and below the process value. Measurement value changes in excess of the adjusted bandwidth are not filtered.

Fig. 3: Filter function

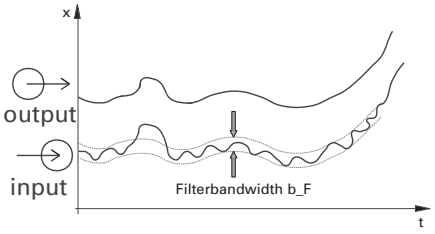

LIMIT VALUE FUNCTIONS

Max, Min or Max/Min monitoring with adjustable hysteresis.

Monitored signals

- Process value
- Input 1
- Input 2
- counter / frequency value

Functions

- Input value monitoring
- Input value monitoring with storage
- Signal changes / with storage
- Reset via front panel or digital input
- Alarm discriminator adjustable from 0...9999 seconds
- Several limit values and alarm messages can be logically "OR-linked".
- Limits can used as control signals.

ALARMS

Sensor break / short circuit

Depending on the selected input type, the input circuit is monitored for break, short circuit, and reversed polarity.

Fig. 4: Dimensions CI 45

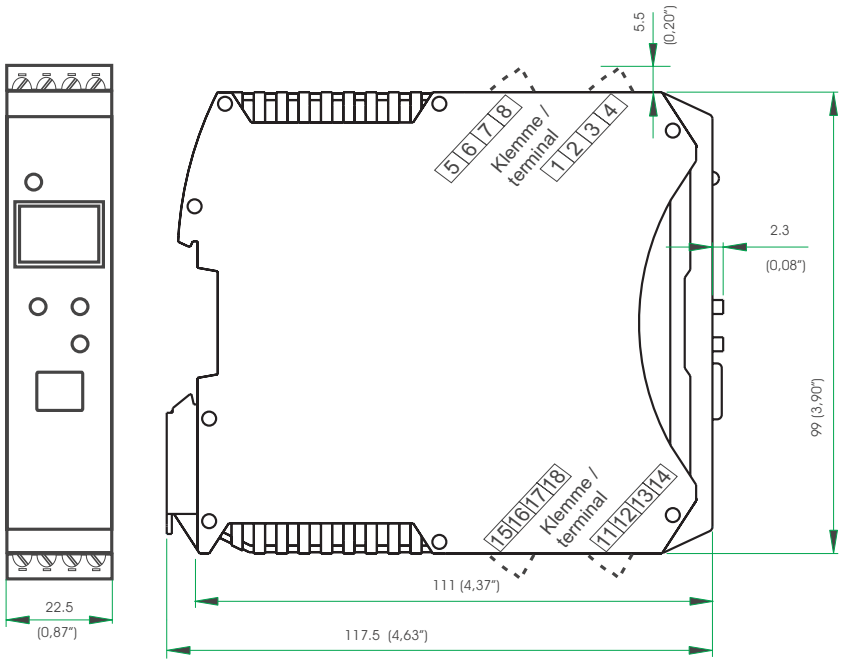

MAINTENANCE MANAGER

Display of error messages, warnings, and stored limit value messages in the error list. Messages are stored, and can be reset manually.
Possible elements in the error list:

Sensor break, short circuit, incorrect polarity
Stored limit values
Heating current alarm
Control loop alarm
Fault during self-tuning
E.g. Re-calibration warning (message is generated when a predefined operating time is reached)
E.g. Maintenance interval for a switching device (message is generated when a predefined number of switching cycles is reached)
Internal fault (RAM, EEPROM, ...)

DISPLAY AND OPERATION

Display

LCD:

dual-line plus additional display elements

Upper line:

4 digits, 7-segment LCD

- for process value

Lower line:

5 digits, 14-segment LCD; configurable contents (via BlueControl®)

- Engineering unit
- Parameters
- Extended Operating Level

Additional display elements

4 display elements (bars in the lower line of the LCD, identified as 1, 2, F, E)

- Bars 1 and 2: OUT1/OUT2 active or INP1/INP2 active
- Bar F: Function active (planned)
- Bar E: Entry has been made in the error list

Dual-color indicator LEDs:

- Green = OK
- Green, blinking = no data exchange with bus coupler (only for devices with system option)
- Red = limit value Lim1 triggered
- Red blinking = internal fault, configuration mismatch

Operating functions

Only three keys at the front of the CI 45 are used to operate process values, parameters, and configuration data. Different Operating Levels and selected parameters can be disabled by means of BlueControl®.

POWER SUPPLY

Depending on ordered version:

AC supply

Voltage:	90...260 V AC
Frequency:	48...62 Hz
Consumption:	approx. 7 VA max.

Universal supply 24 V UC*

AC supply:	18...30 V AC
Frequency:	48...62 Hz
DC supply: 1	8...31 V DC
Consumption:	approx. 4 VA/3 W max.

Supply only from safety electrical low voltage (SELV).

** Devices with system option:*
They are supplied via the bus connector from bus coupler or power supply module.

Behaviour with power failure

Configuration and parameter settings:
Permanent storage in EEPROM

BLUEPORT® FRONT INTERFACE

Connection to the transmitter front via a PC adapter (see 'Accessories'). The BlueControl® software enables the CI 45 to be configured, parameters set, and operated.

BUS INTERFACE (OPTIONAL)

RS 485

Connection via bus connector fitted in the top-hat rail. Screened cables should be used.

Galvanically isolated

Type:	RS 485
Transmission speed:	2400, 4800, 9600, 19,200, 38,400 bits/sec
Parity:	even, odd, none
Address range:	1...247
Number of transmitters per bus segment:	32

Protocol

- MODBUS RTU

SYSTEM INTERFACE

For connection to fieldbus couplers (see system components)
Connection via bus connector fitted in the top-hat rail.
Technical data see data sheet 9498-737-50913.

ENVIRONMENTAL CONDITIONS

Protection mode

Front panel:	IP 20
Housing:	IP 20
Terminals:	IP 20

Permissible temperatures

For specified accuracy:	-10...55°C
Warm-up time:	< 20 minutes
Temperature effect:	≤ 0.05% / 10 K
add. influence to cold junction compensation:	≤ 0.05% / 10 K
Operating limits:	-20...60°C
Storage:	-30...70°C

Humidity

Max. 95%, 75% yearly average, no condensation

Shock and vibration

Vibration test Fc (DIN EN 60068-2-6)

Frequency:	10...150 Hz
Unit in operation:	1g or 0.075 mm
Unit not in operation:	2g or 0.15 mm

Shock test Ea (DIN EN 60068-2-27)

Shock:	15 g
Duration:	11 ms

Electromagnetic compatibility

Complies with EN 61 326-1 for continuous, unattended operation.

Interference radiation:

- Within the limits for Class B devices.

Immunity to interference:
Meets the test requirements for devices in industrial areas.

Evaluation criteria:

- Surge interference partly has marked effects, which decay after the interference stops.
- With high levels of surge interference on 24 V AC mains leads, it is possible that the device is reset.
- With HF interference, effects up to 50 µV can occur.

GENERAL

Housing front

Material:	Polyamide PA 6.6
Flammability class:	V0 (UL 94)

Connecting terminals

Material:	Polyamide PA
Flammability class:	V2 (UL 94) for screw terminals V0 (UL 94) for spring-clamp terminals bus connector

Electrical safety

Complies with EN 61010-1:
Over-voltage category II
Contamination degree 2
Protection class II

Electrical connections

Plug-in connector strips with choice of terminal type:

- Screw terminals or spring-clamp terminals, both for lead cross-sections from 0.2 to 2.5 mm^2. (AWG24-12)

Mounting method

Clip-on rail mounting (35 mm top-hat rail to EN 50 022). Locked by means of metal catch in housing base. Close-packed mounting possible.

Mounting position: vertical

Weight:
0,18 kg

CERTIFICATION

- CE certified
- UL / cUL certified (applied for)

ACCESSORIES

BlueControl® (Engineering Tool)

PC program for configuring, parameter setting, and operating (commissioning) the CI 45 transmitter. Moreover, all settings are saved and can be printed, if required.

Depending in version, a powerful data acquisition module with trend graphics is available.

Show/hide function

The BlueControl® software enables any number of parameters and configuration setting to be shown/hidden.

Fig. 5: Interface parameters hidden, only address visible

Name	Description	Visible
othr	**Other**	☑
bAud	baudrate	☐
Addr	address	☑
PrtY	parity	☐
dELY	answer delay [ms]	☐
D.Unt	display unit	☑
O2	parameter unit for O2	☑
Unit	unit	☑
dP	decimal points	☑
SEGm	display segment assignment	☑
C.dEL	modem delay [ms]	☑

This ensures that only permitted parameters & settings can be changed in the transmitter. Safety-relevant parameters are not displayed.

Simulation function

The built-in simulation serves to test the settings.

Import function

Engineerings of UNIFLEX CI/CB created by engineering tool ET/Uniflex can be read and transformed if possible.

Software requirements:
Windows 95/98/NT/2000/XP

Configuration settings made only via the BlueControl® software (not via the transmitter's front keys)

- Customer-specific linearization
- Enable forcing for inputs and outputs
- Setting the limits for operating hours and switching cycles
- Switch-over to 60 Hz mains frequency
- Blocking operator functions, Operating Levels, and password definition
- Text setting
- Definition of the display contents

Hardware requirements:

A special PC adapter (see 'Accessories') is required for connecting to the transmitter.

Updates and demo software from:
www.pma-online.de

Table 4: BlueControl®, versions und functions:

Functionality	Mini	Basic	Expert
parameter and configuration setting	yes	yes	yes
download: writes an engineering to the device	yes	yes	yes
online-mode / visualisation	SIM only	yes	yes
creation of user defined linearizations	yes	yes	yes
configuration of extended operation level	yes	yes	yes
upload: reads an engineering from the device	SIM only	yes	yes
basic diagnosis function	no	no	yes
saves files and engineering data	no	yes	yes
printer function	no	yes	yes
online documentation / help system	yes	yes	yes
measurement correction (calibration procedure)	yes	yes	yes
data acquisition and trend function	SIM only	yes	yes
net- / multi licence	no	no	yes
personal assistant function	yes	yes	yes

Fig. 6: Accessory parts

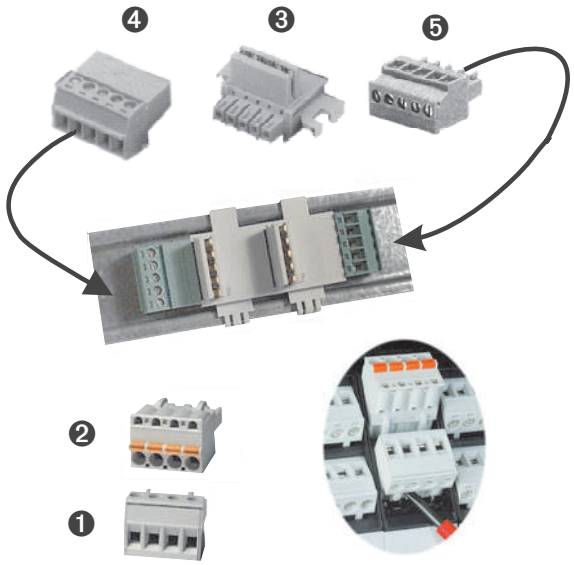

ACCESSORIES

Description	Quantity	Order no.
❶ Connector set with screw terminals	4 pieces	9407-998-07101
❷ Connector set with spring-clamp terminals	4 pieces	9407-998-07111
❸ Bus connector for fitting in top-hat rail	1 piece	9407-998-07121
❹ Plug for bus connection, connections at left, horizontal cable entry	1 piece	9407-998-07131
❺ Plug for bus connection, connections at right, vertical cable entry	1 piece	9407-998-07141

ADDITIONAL ACCESSORIES

Description	Language	Order no.
PC adapter for the BluePort® front interface		9407-998-00001
USB serial adaptor (USB to RS 232)		9407-998-00081
Converter RS 232 to RS 422/485	galv. isolated	ADAM-4520-D
BlueControl® Mini	German/English	www.pma-online.de
BlueControl® with Basic license rail line	German/English	9407-999-12001
BlueControl® with Expert license rail line	German/English	9407-999-12011

ORDERING INFORMATION

Transmitter UNIFLEX CI 45 C I 4 5 - 1 _ _ - _ _ 0 _ 0 - _ 00

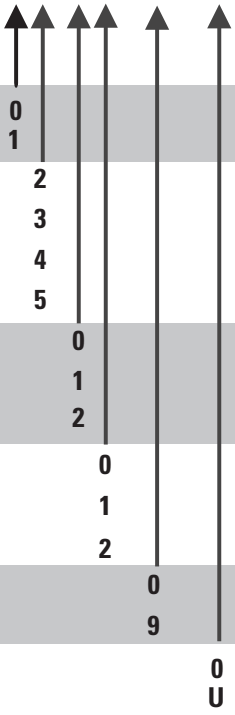

1 universal-input, 1 digital input with display and BluePort®-interface	
without plug-in connector terminals	**0**
with screw-terminal connectors	**1**
90..260V AC, mA/V/logic +1 relay	**2**
18...30VAC/18..31VDC, mA/V/logic +1 relay	**3**
90..260V AC, mA/V/logic +2 relay	**4**
18...30VAC/18..31VDC, mA/V/logic +2 relay	**5**
no option	**0**
RS 485 / MODBUS - protocol	**1**
System interface (only for 24 V versions)	**2**
No option	**0**
Option package 1*	**1**
Option package 2**	**2**
Standard configuration	**0**
Configuration to order	**9**
Standard (CE-certified)	**0**
UL /cUL - certified ***	**U**

* Option package 1: additional universal input INP2, plus: O2-measuring; counter input; functions tare, sample&hold, integrator

** Option package 2: additional to option package 1: Digital input as optocoupler, frequency input / output

*** applied for

Standard accessories:

- Operating notes
- Devices with 'Interface' option: bus connector for fitting into top-hat rail

➢ Please also order the associated **documentation**: (as separate item)

Description	**Order no.**
Operating instructions for CI 45 (D)	9499-040-71718
Operating instructions for CI 45 (E)	9499-040-71711
Interface description for Modbus rail line (D)	9499-040-72018
Interface description for Modbus rail line (E)	9499-040-72011
Interface description for PROFIBUS-DP (D)	9499-040-77118
Interface description for PROFIBUS-DP (E)	9499-040-77111

SYSTEM COMPONENTS

Fieldbus coupler PROFIBUS DP	**RL40-112-00000-000**
Fieldbus coupler PROFIBUS DP, UL / cUL certified ***	**RL40-112-00000-U00**
Power supply module	**RL40-119-00000-000**
Power supply module UL / cUL certified ***	**RL40-119-00000-U00**

*** applied for

PMA
Prozeß- und Maschinen- Automation GmbH
P.O. Box 31 02 29
D-34058 Kassel
Tel.: +49 - 561- 505 1307
Fax: +49 - 561- 505 1710
E-mail: mailbox@pma-online.de
Internet: http://www.pma-online.de

Your local representative

Printed in Germany - Edition 05/2005- Subject to change without notice - 9498 737 48313