ENC08A

Connecting cable with socket

ADOGH050MSN0005H05/1G/1D

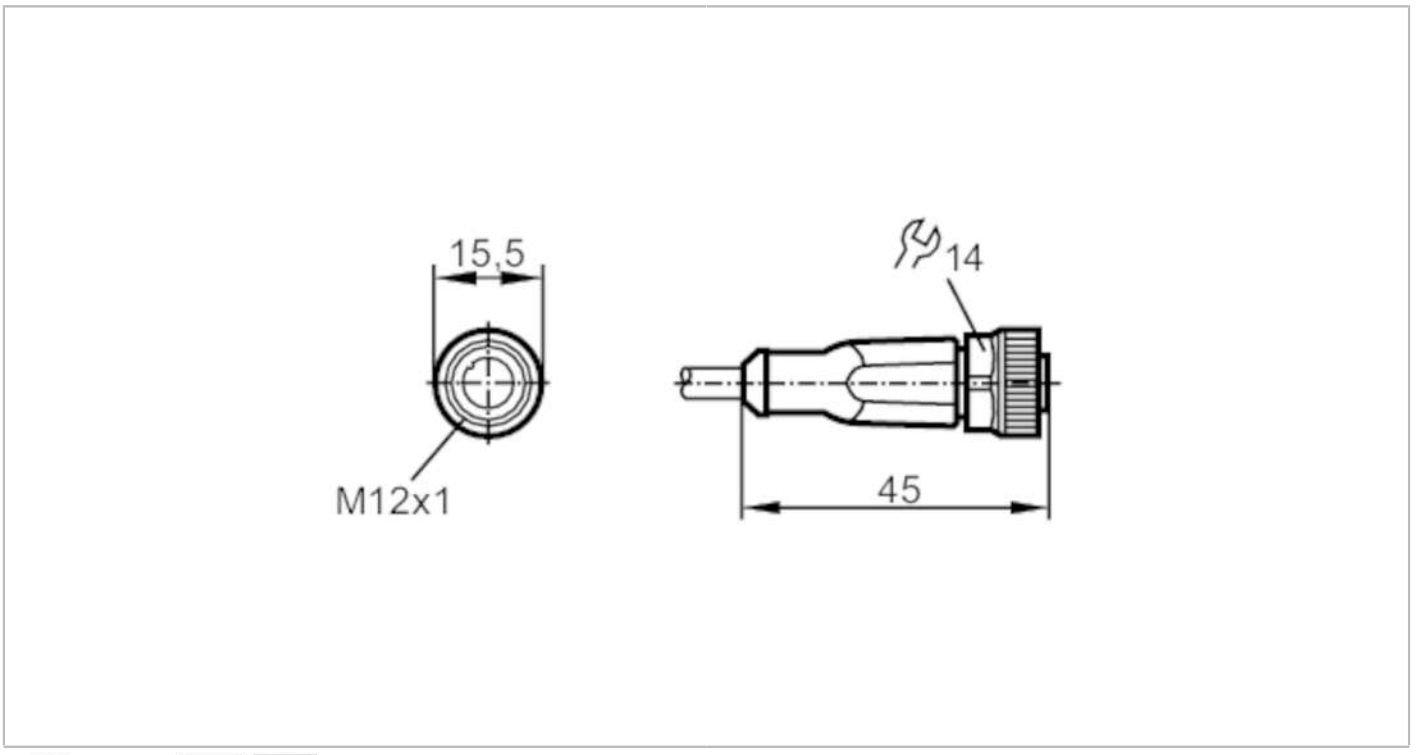

Application		
Special feature		Free from silicone; Halogen-free; Gold-plated contacts
Free from silicone		yes
Compatible with paint		yes
Electrical data		
Operating voltage	[V]	< 30 DC
Protection class		II
Max. input power	[mW]	group II: 1000; group IIIB: 1000; group IIIC: 550 (Ta < 90 °C) / 650 (Ta < 70 °C) / 750 (Ta < 40 °C)
Max. current load total	[A]	1
Operating conditions		
Ambient temperature	[°C]	-25...90
Note on ambient temperature		for use in hazardous areas: ambient temperature in accordance with unit marking
Protection		IP 67; (when used outside the hazardous area: IP 68 / IP 69K)
Tests / approvals		
Approval		BVS 11 ATEX E 009 X; IECEx BVS 11.0002 X
ATEX marking		II 1G Ex ia IIB T6 Ga Ta: -25...80°C
		II 2G Ex ia IIC T6 Gb Ta: -25...80°C
		II 1D Ex ia IIIC T85°C Da Ta: -25...80°C
		II 1G Ex ia IIB T5 Ga Ta: -25...90°C
		II 2G Ex ia IIC T5 Gb Ta: -25...90°C
		II 1D Ex ia IIIC T95°C Da Ta: -25...90°C

ENC08A

Connecting cable with socket

ADOGH050MSN0005H05/1G/1D

Safety classification		
Max. internal capacitance	[nF]	0.5
Max. internal inductance	[µH]	10
Mechanical data		
Weight	[g]	209.2
Dimensions	[mm]	15.5 x 15.5 x 45
Materials		housing: TPU orange; Sealing: FKM
Material nut		brass, nickel-plated
Remarks		
Remarks		Special conditions for safe operation apply for use in hazardous areas. Observe the corresponding notes in the operating instructions (Ex protection related part).
Pack quantity		1 pcs.

Electrical connection

Cable: 5 m, PUR, Halogen-free, blue, Ø 4.9 mm; 5 x 0.34 mm² (42 x Ø 0.1 mm)

Electrical connection - socket

Connector: 1 x M12, straight; coding: A; Locking: brass, nickel-plated; Contacts: gold-plated; Tightening torque: 0.6...1.5 Nm

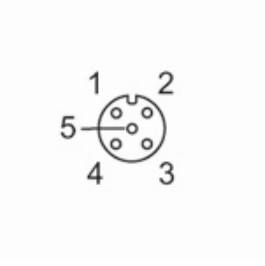

Connection



	Core colours :
BK =	black
BN =	brown
BU =	blue
GY =	grey
WH =	white