INSTALLATION

SAFETY RELAY
011–160 CD292/231209

CD292/231209

SMARTSCAN

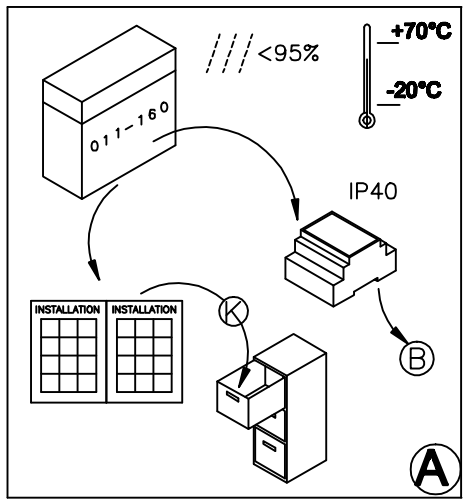

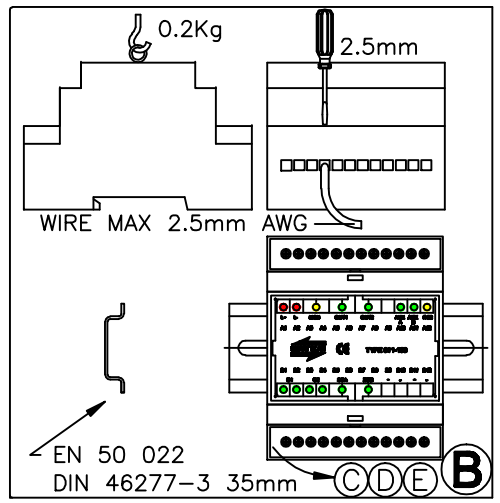

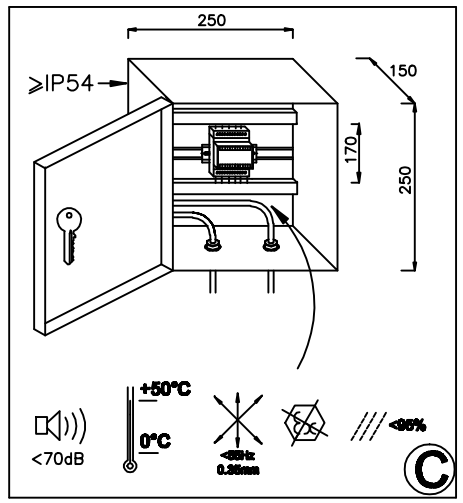

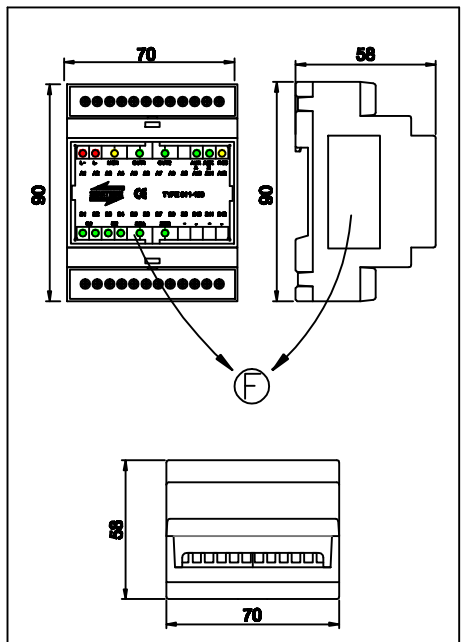

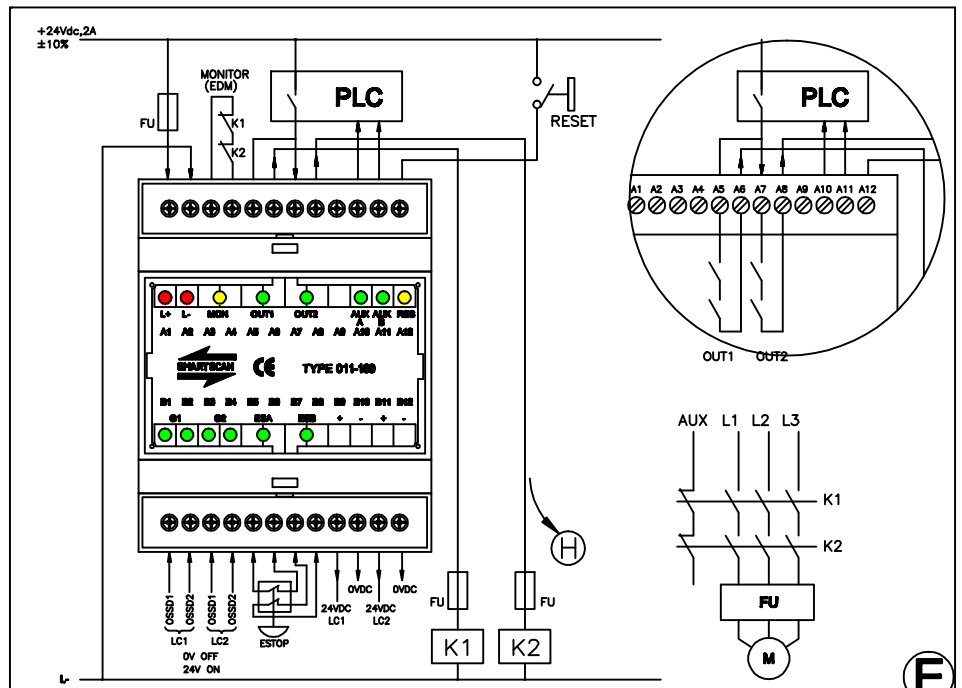

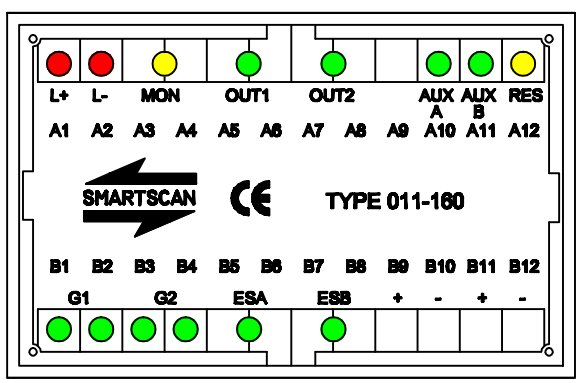

V = +24V DC
I = 120mA + LC
= 250V AC 2A
= 10^8 OPERATIONS
= 30mS
= IP40
= EN954–1 CATEGORY 4
= BS EN62061 SIL 3
= BS ENISO 13849 PL 'e'

SMARTSCAN LTD. CORBY. NORTHANTS. NN17 5XJ. UK.
TEL: +44(0)1536 401313 FAX: +44(0)1536 268954

F

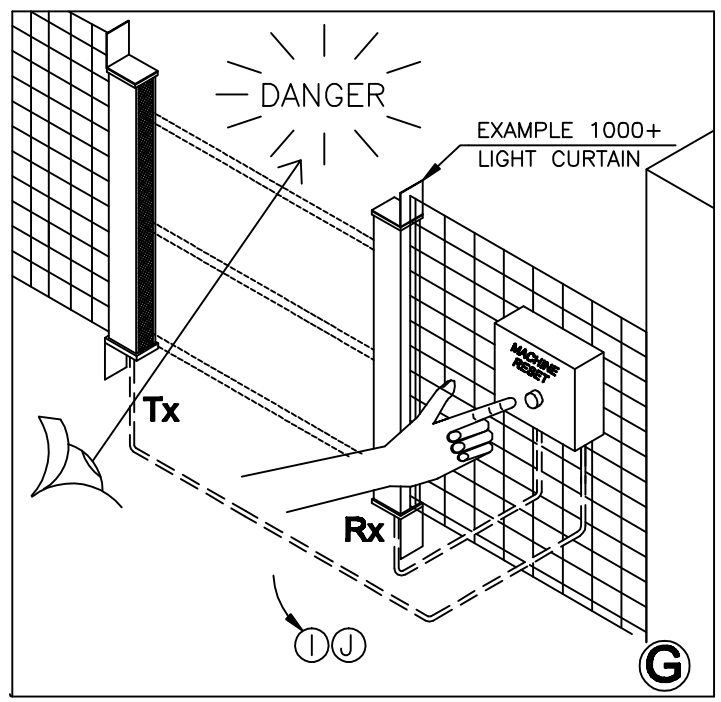

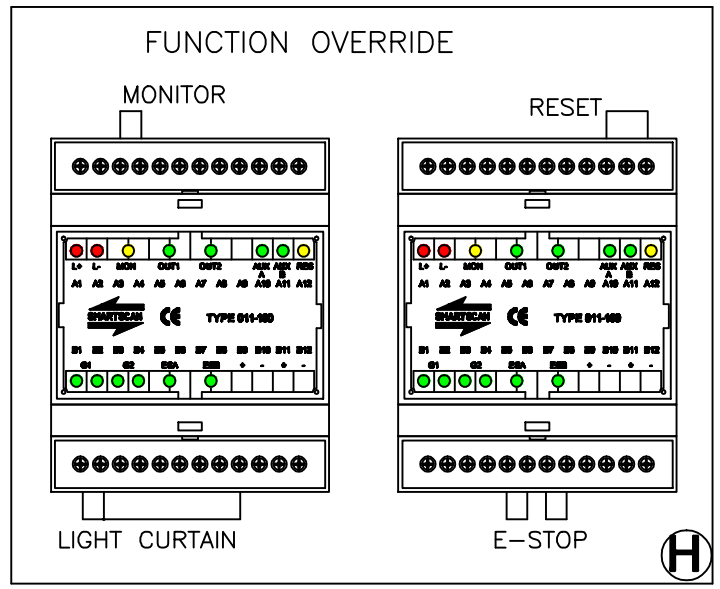

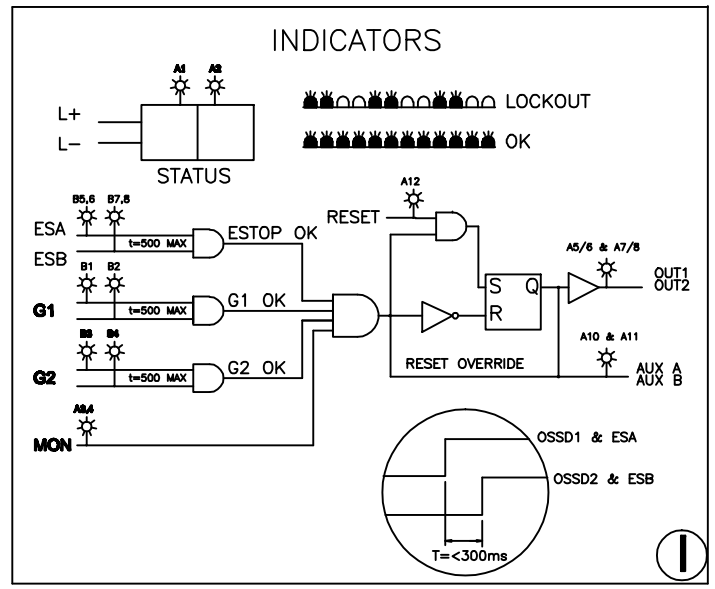

CD0292J/231209

EC Declaration of Conformity

Product: Smartscan Multi-Function Unit (MFU) safety controller
Models: 011-149, 011-151, 011-155, 011-160

Smartscan Limited, Pywell Road, Willowbrook Industrial Estate, Corby, Northamptonshire, NN17 5XJ

Declares that the safety components(s) described:
011-149, 011-151, 011-160 Serial Numbers: Between 600 000 - 999 999
011-155 Serial Numbers: Between 300 000 – 319 999

Fulfils the following safety function: Safety relay controller (011-149 in conjunction with 1000+ series light curtain products)

Conforms to the following Directives:
Machinery Directive 98/37/EC, 2006/42/EC
Electromagnetic Conformity Directive 2004/108/EC
Low Voltage Directive 2006/95/EC

Complies with the relevant requirements of the following Standards:

	011-149	011-151	011-155	011-160
EN 954-1,	Category 3	Category 4	Category 4	Category 4
IEC 62061	SIL2	SIL 3	SIL 3	SIL 3
EN ISO 13849-1	PL d	PL e	PL e	PL e

Uses the following standards:
ISO 12100-1, ISO 12100-2, EN 60204-1, EN415-4

Complies with the examples to which the EC type examination certificate below relates, and is in conformity with the protection requirements of Council Directive 2004/108/EC, as amended, on the approximation of the laws of the Member States relating to electromagnetic compatibility.

The component is of a type listed in Annex IV of the Machinery Directive. Examples have been submitted for type examination by the approved body identified below.

Satenet Limited Notified Body Number 1674
Address Pywell Road, Corby, Northamptonshire, NN17 5XJ
Certificate No. 520040809

Signed: _____ Date: 23.12.2009
Title: Project Manager

J

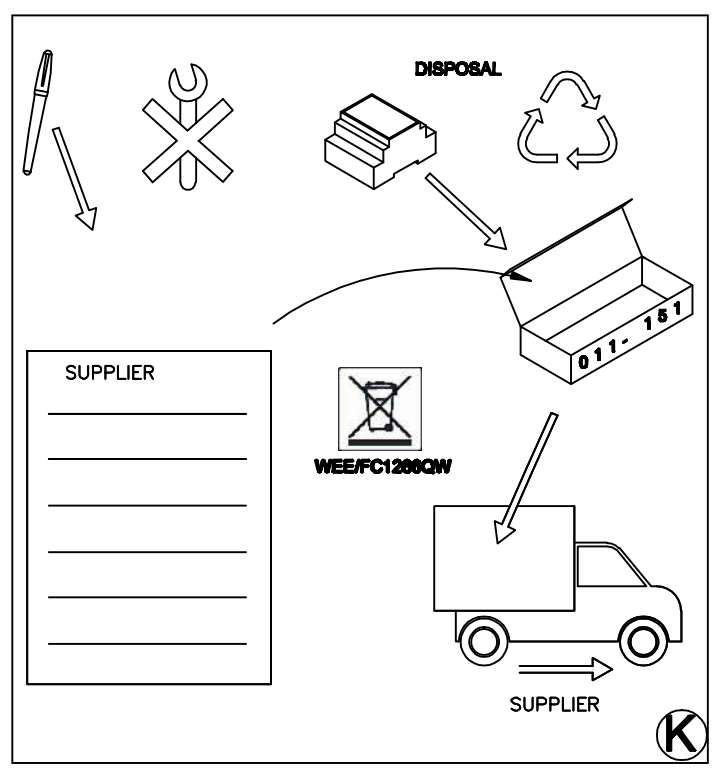

GLOSSARY ENGLISH	GLOSSAIRE FRANCAIS	ORDBOG DANSK	GLOSSAR DEUTSCHE	BIBLIOGRAFIE DUTCH	GLOSSARIO ITALIANO	GLOSARIO ESPAGNOL	ORDLISTA SVENSKA
CATEGORY	–	KATEGORI	KATEGORIE	–	–	CATEGORIA	KATEGORI
CONTROL	CONTROLE	KONTROL	STEUERN	BESTURING	CONTROLLO	CONTROLAN	KONTROLL
DANGER	DANGER	FARE	GEFAHR	GEVAAR	PERICOLO	PELIGRO	FARA
EXAMPLE	EXAMPLE	EKSEMPEL	BEISPIEL	–		EJEMPLO	EXEMPEL
FUNCTION	FONCTION	FUNKTION	FUNKTION	FUNCTIE	FUNZIONE	FUNCION	FUNKTION
INDICATORS	INDICATEURS	INDIKATION	ANZEIGES	INDICATORS	INDICATORES	INDICATOR	INDIKERING
INSTALLATION	INSTALLATION	INSTALLATION	INSTALLATION	INSTALLIE	INSTALLAZIONE	INSTALACION	–
LOCKOUT	LOCKOUT	LOCKOUT	LOCKOUT	LOCKOUT	LOCKOUT	LOCKOUT	LOCKOUT
MONITORING	SURVEILLANCE	AFLÆSE	UBERWACHUNG	BEWAKING	MONITORAGGIO	EL VIGILAR	OVERVAKANDE
OUTPUT	SORTIE	UDGANG	AUSGABE	UITGANG	USCITA	DALIDA	UTGANG
OVERRIDE	OVERRIDE	OVERSTYRE	OVERRIDE	OVERBRUGGING	ESCLUSIONE AUTOMATISHO	OVERRIDE	MOTTAGARE
POWER	–	FORSYNING	STROM	–	–	ALIMENTACIÓN	SPÄNNING
RESET	–	RESET	RESET	–	–	RESET	ÅTERSTÄLLNING
SAFETY	SURETE	SIKKERHED	SICHERHEIT	VEILIGHEID	SIGUREZZA	SEGURIDAD	SAKERHET
SUPPLIER	FOURNISSEUR	LEVERANDØR	LIEFERANT	LEVERANCIER	FORNITORE	SURDITOR	LEVERANTOR
USE	–	BRUG	GEBRAUCH	GEBRUIK	–	USAR	ANVÄNDA
USER	–	BRUGER	NUTZER	GEBRUIKER	UTILIZZATORE	USUARIO	ANVÄNDARE

L