E12639

Connector

SPLITTER CABLE END CAP 4p

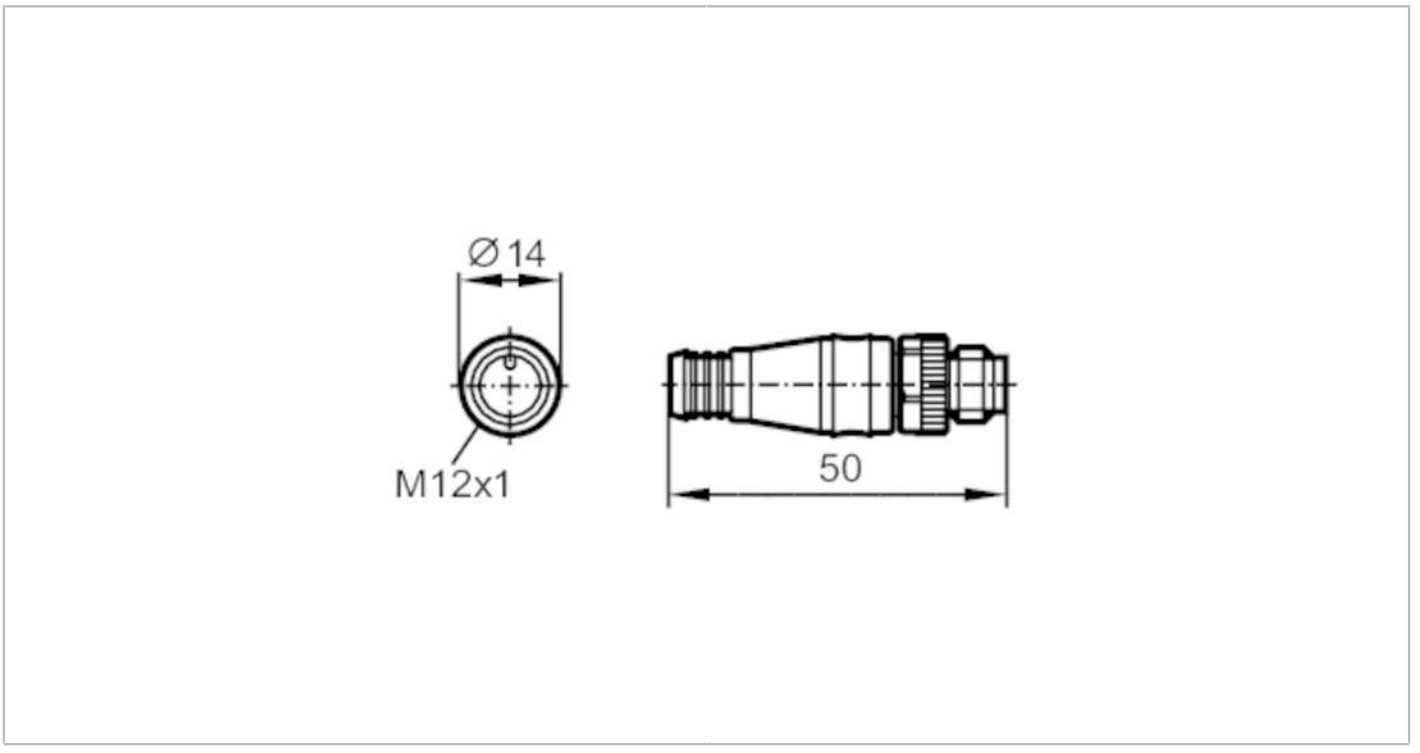

Application		
Special feature		Free from silicone; Gold-plated contacts
Free from silicone		yes
Electrical data		
Operating voltage	[V]	< 30 AC / < 36 DC
Max. current load total	[A]	4
Operating conditions		
Ambient temperature	[°C]	-25...85
Ambient temperature (moving)	[°C]	> -15
Protection		IP 67
Mechanical data		
Weight	[g]	16.4
Dimensions	[mm]	Ø 14 / L = 50
Moulded-body material		TPU, Halogen-free
Material nut		brass, nickel-plated
Remarks		
Pack quantity		1 pcs.

E12639

Connector

SPLITTER CABLE END CAP 4p

Electrical connection

Connector: M12; coding: A; Moulded body: TPU, Halogen-free; Locking: brass, nickel-plated; Contacts: gold-plated; Tightening torque: 1 Nm



Connection

