Brand of NTN corporation

Technical data

UKT.210H

Bearing units



Grey cast housing, radial insert ball bearing with adapter sleeve,seal with slinger

KIT CONTENT

UK210G2H, T210

VISUAL (S)

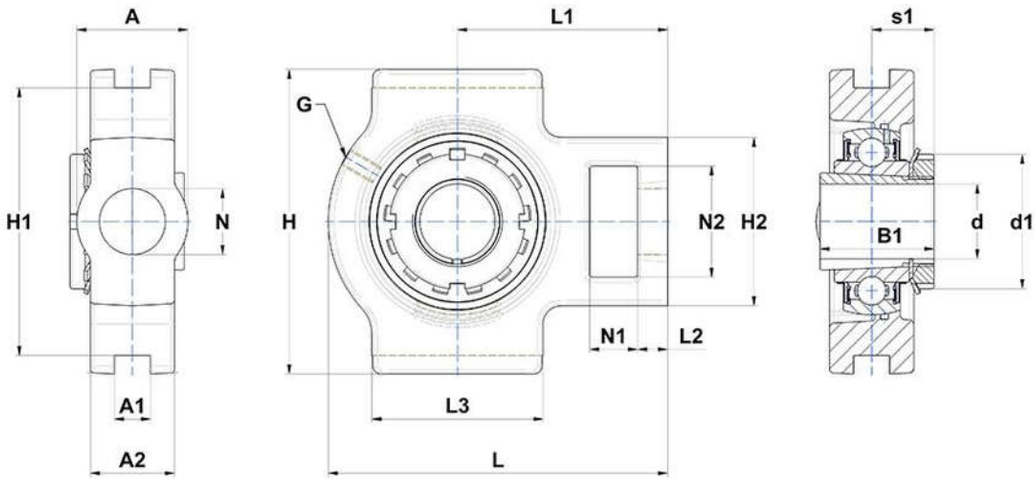

PRODUCT DEFINITION

Brand	SNR
A - Housing width	49 mm
A1 - Width of location slot	16 mm
A2	37 mm
B1 - Overall width Inner Ring	55 mm
d - Shaft diameter	45 mm

PRODUCT DEFINITION	
d1 - Outer dia of eccent. Lock. collar / nut of adapter sleeve	70 mm
G - Grease fitting	M6x1
H - Housing length, width or diameter	117 mm
H1 - Distance between location slots	102 mm
H2 - Housing height / width	83 mm
L - Housing length	149 mm
L1 - Distance attachment end face to bearing centerline	90 mm
L2 - Thickness of attachment end	16 mm
L3 - Length of guidance slot/face	86 mm
N - Mounting hole dimension	29 mm
N1 - Length of attachment slot	19 mm
N2 - Height of attachment slot	49 mm
s1 - Distance nut to middle of bearing raceway	27,5 mm

PRODUCT PERFORMANCE	
C - Dynamic load rating	35100000 mN
C0 - Static load rating	23200000 mN
Operating temperature min.	253,15 °K
Operating temperature max.	373,15 °K

OTHER FEATURES	
Mass	2,63 kg
Adapter sleeve designation	H2310