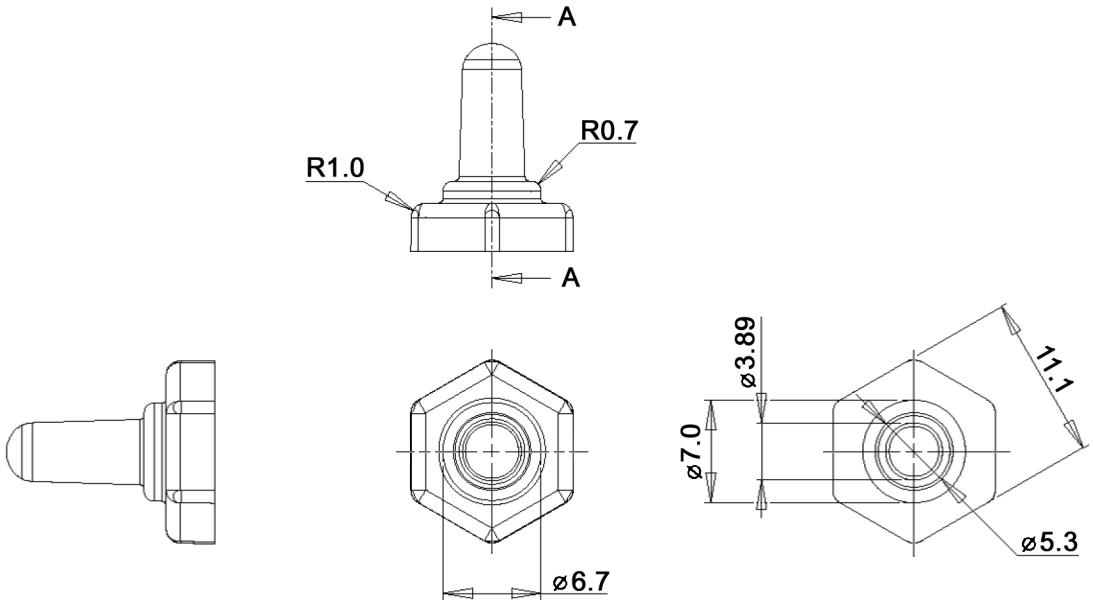

A-A

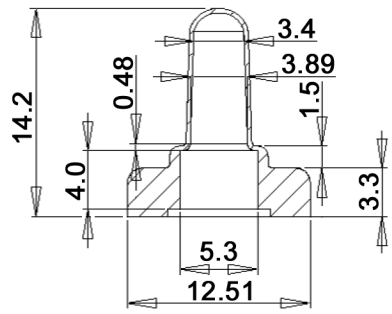

NUT

M6x0.75

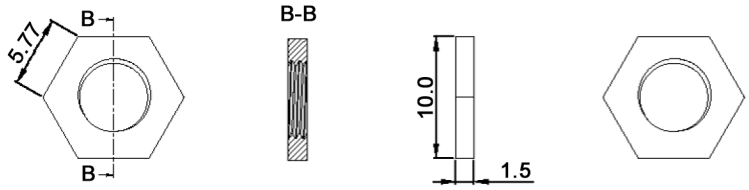

Material: neoprene (CR), black, hardness: 60 +/-5 shore A

Nut: brass

RoHS-conform 2002/95/EC

Tolerances: 0~10mm +/- 0.10mm; 10~20mm +/- 0.15mm; 20~30mm +/- 0.20mm; 30~40mm +/- 0.25mm; 40~50mm +/- 0.30mm; 50~60mm +/- 0.35mm; 60 and above +/- 0.6%			Date	Name
			04/13	dr
Modifications	Date	Name		

ET 102

knitter-switch

30 28 44

Page 1/1