EBC118

Y-splitter

ZDO2H040MSS0000-00STGH040MSS

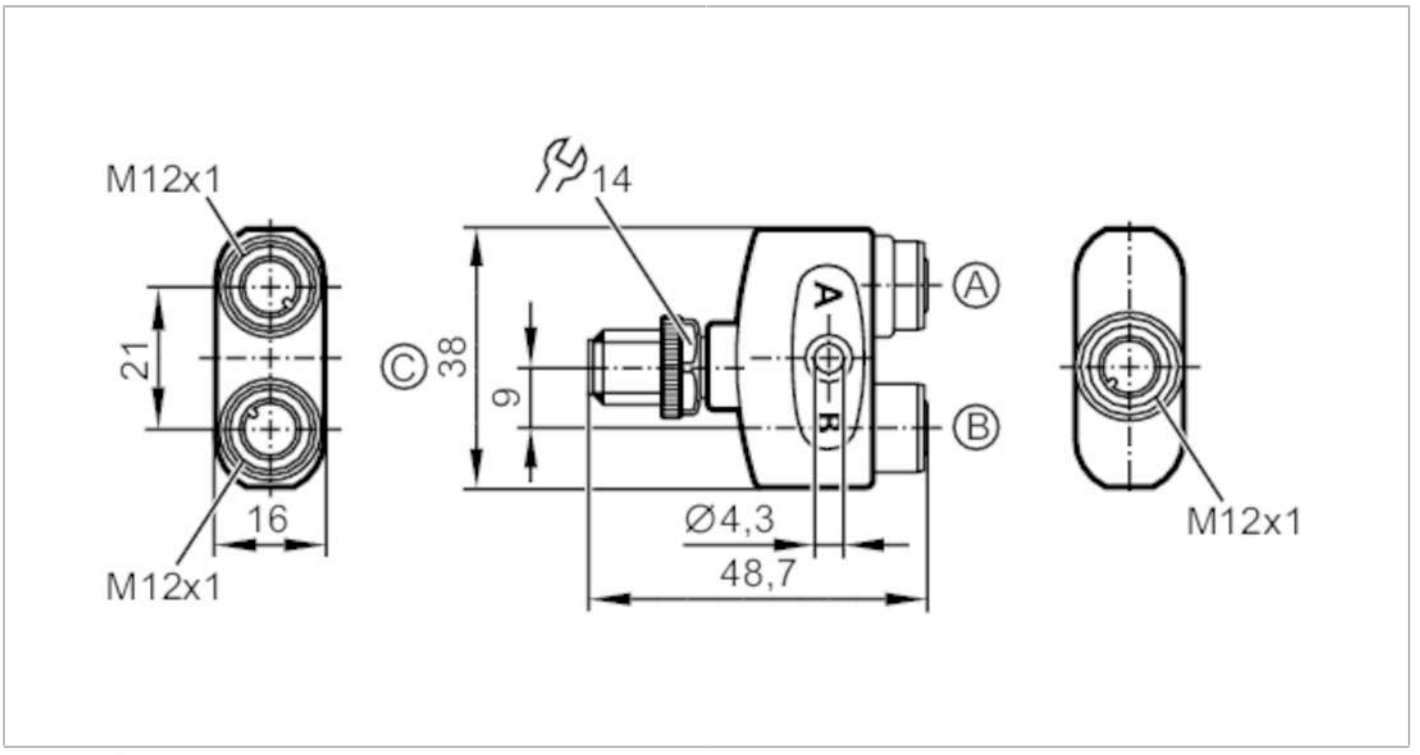

Application		
Special feature		Free from silicone; Gold-plated contacts
Application		logic AND function
Free from silicone		yes
Electrical data		
Operating voltage	[V]	< 60 AC/DC; (cULus: 30 AC / 42 DC)
Protection class		II
Max. current load per module/slot	[A]	4
Max. current load total	[A]	4
Operating conditions		
Ambient temperature	[°C]	-25...90
Note on ambient temperature		cULus: ...65 °C
Storage temperature	[°C]	-25...55
Storage humidity	[%]	10...100
Other climatic conditions for storage according to stated class		1K22/ DIN 60721-3-1
Protection		IP 65; IP 67; IP 68; IP 69K
Mechanical data		
Weight	[g]	36.6
Materials		housing: PA orange; Sealing: FKM
Material nut		brass, nickel-plated

EBC118

Y-splitter

ZDO2H040MSS0000-00STGH040MSS

Remarks

Pack quantity	1 pcs.

Electrical connection - plug

Connector: 1 x M12; coding: A; Locking: brass, nickel-plated; Contacts: gold-plated; Tightening torque: 0.6...1.5 Nm

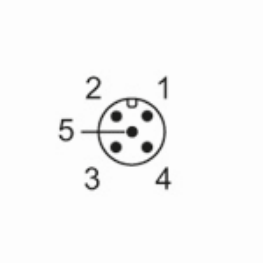

Connection

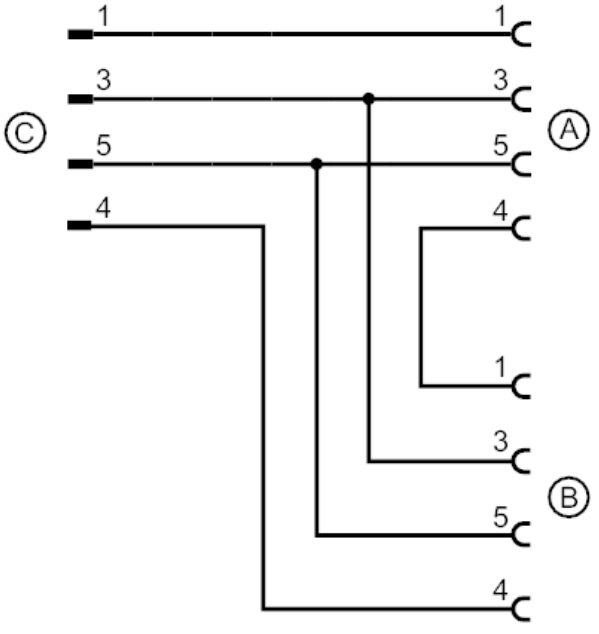

Electrical connection - socket

Connector: 2 x M12; coding: A; Locking: brass, nickel-plated; Contacts: gold-plated; Tightening torque: 0.6...1.5 Nm

